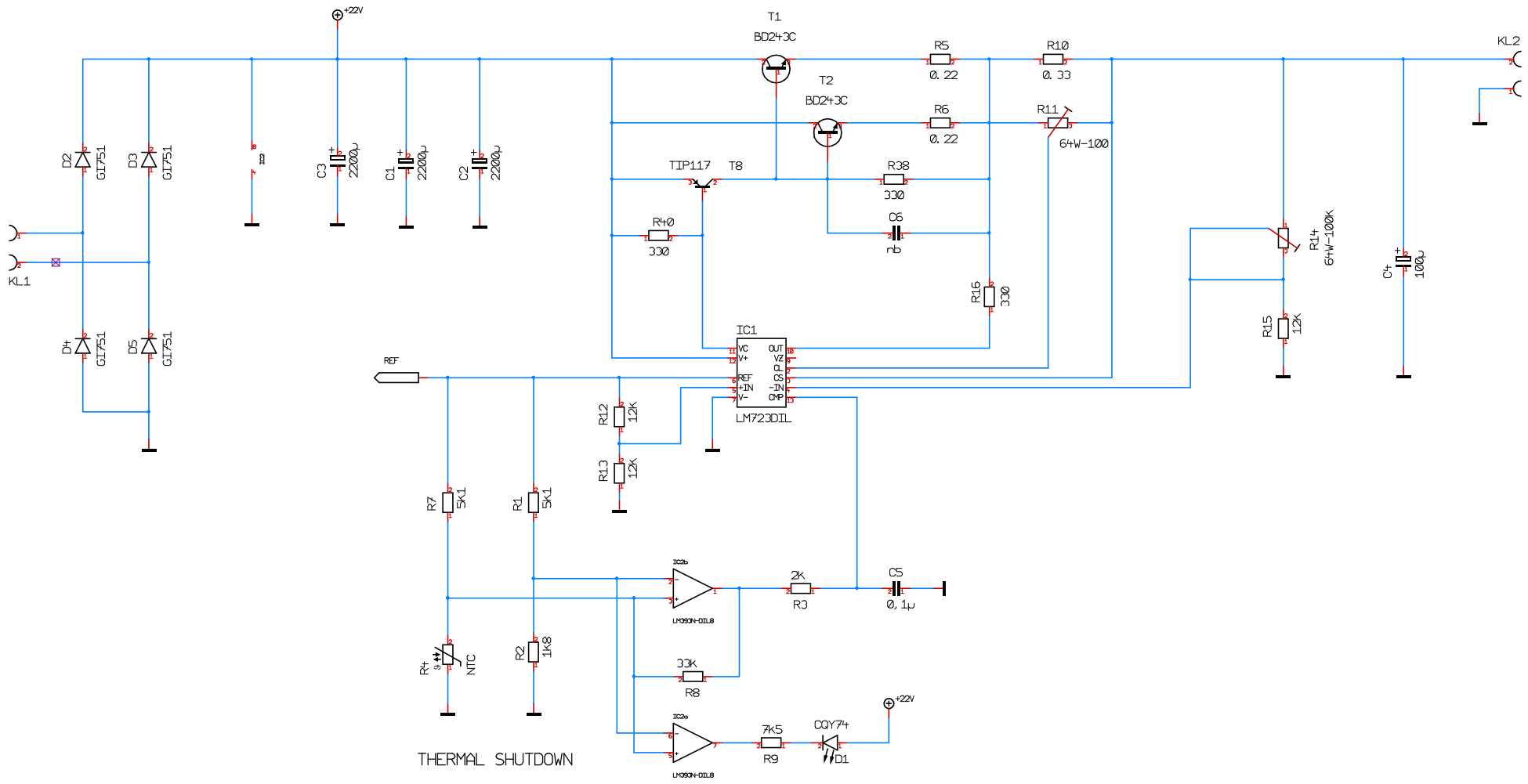

EPCOS-B57703M103G40

PROJECT : PETH - 303A	
FUNC: POWER SUPPLY	
DATE: 29 JULY 2008	PAGE: 1

ETH QUANTUMOPTICS

Alexander C. Frank, HPF-D16, 8093 Zürich