Eidgenössische
Technische Hochschule
Zürich
Departement Physik

Elektronik-Lehrlabor

PETH-49
Labornetzteil

Bauanleitung

อ. ช้าง เผือก

ETH QUANTUMOPTICS

Inhalt

Einführung	3
Blockschema, Schaltungsbeschreibung	4
Schema	6
Bestückungsplan	7
Kupfermaske (Printplatte)	8
Stückliste	7
Gehäuse, Frontplatte, Rückwand	11
LCD – Modul	12
Drehspulinstrument / Skala	13
Bodenplatte	13
Kühlkörper	14
Verdrahtungsplan	14
Inbetriebnahme	15
Anhang	16
Datenblätter der Halbleiter	18
Frontplatte	46
Rückwand	47
Bodenplatte	48
Skala	49
DC/DC Wandler (TMA2412S)	50

Einführung

Dieses Netzteil wurde speziell für deinen Kurs entwickelt.

Es ist einerseits ein Lehrstück, andererseits kann es später sinnvoll eingesetzt werden. Zu diesem Zweck wurden ausschliesslich Bauteile verwendet, die "immer und überall" erhältlich sind bzw. einfach durch ähnliche ersetzt werden können.

Bei der Konstruktion wurde darauf geachtet, dass alle Arbeitsgänge der Geräteherstellung (soweit möglich) berücksichtigt wurden.

- Printherstellung und Bestückung
- Verdrahtung mittels Kabelbaum / Drahtzugliste
- Herstellen von Frontplatten mittels GEDAKOP™
- Mech. Bearbeiten von Frontplatte / Rückwand (Stanzen, Bohren,...)
- Einstellen von Trimmern (Kalibrieren)
- Verdrahtung von 230V Netzspannung / Erdung
- Inbetriebnahme / Funktionskontrolle

Hinweise zum Bestücken der Platine :

Es ist sehr vorteilhaft ***zuerst die niedrigsten Bauteile*** (Drahtbrücken, Widerstände etc.) zu bestücken, weil man sonst eventuell nicht mehr herankommt.

Blockschema

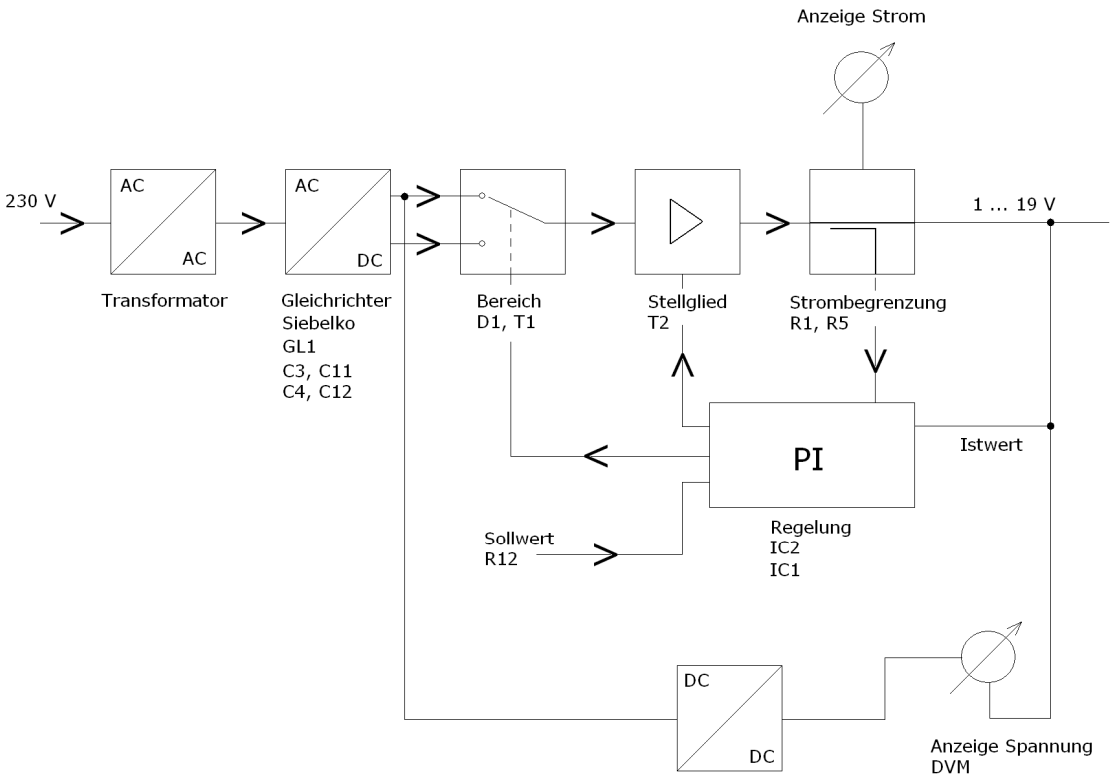

Schaltungsbeschreibung

Die Netzspannung wird durch den Transformator, welcher zwei Sekundärwicklungen besitzt, in 2 x 12 V heruntertransformiert. Diese Spannungen werden mittels des Brückengleichrichters GL1 gleichgerichtet und mittels C3, C11 (LOW) und C4, C12 (HIGH) gesiebt.

Für den Fall, dass die Ausgangsspannung kleiner als ca. 11V ist, ist der Transistor T1 gesperrt und am Kollektor von T2 steht nur die halbe gleichgerichtete Spannung durch D1 an. (ca. 15 V)

Ansonsten (Sollwert, bestimmt durch R12 ist grösser als der Wert, bestimmt durch R26, R27 und die Referenzspannung) schaltet der als Schmitt – Trigger funktionierende OPAMP IC1d und über T1 steht nun die volle Spannung am Kollektor von T2 an (ca. 30V). Dies wird mittels LED an der Frontplatte angezeigt.

Durch diese Massnahme kann die Verlustleistung erheblich reduziert werden.

Sollte der Ausgang kurzgeschlossen werden, so wird mittels OPAMP IC1b automatisch in den unteren Bereich (LOW) geschaltet. Dies geschieht mittels T3, der die Spannung am (+) Eingang von IC1d auf ca. 0.2 V herunterzieht, was auf jeden Fall kleiner als die Vergleichsspannung am (-) Eingang ist.

Die Regelung übernimmt IC2 (LM723, UA723, etc.). Die Ausgangs-spannung wird stetig nachgeregelt, sodass die Spannung am (-) Eingang (Pin4) stets der Sollspannung am (+) Eingang (Pin5) entspricht.

Dabei wird ständig der Spannungsabfall über R1 (bzw. R5) überwacht. Sollte dieser Wert grösser als 0.6 V werden, dann geht die Regelung zur Konstantstromregelung über. Die Ausgangsspannung sinkt nun soweit, bis der Maximalwert erreicht ist. Dies wird mittels IC1a detektiert, welcher die LEDs entsprechend umschaltet.

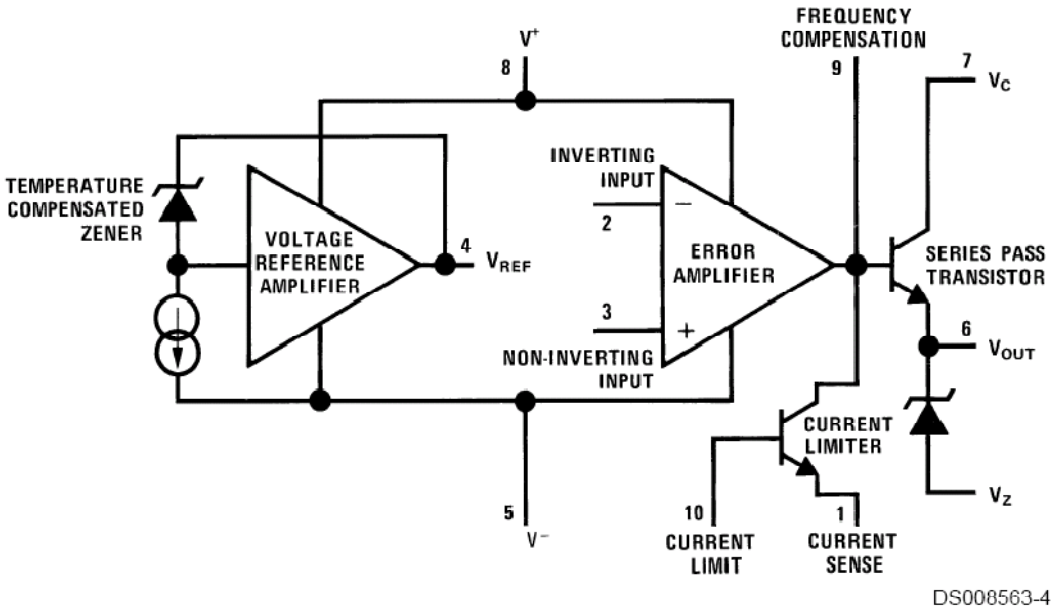

Abb. 1 : Innenbeschaltung des LM723

National Semiconductor

Schema

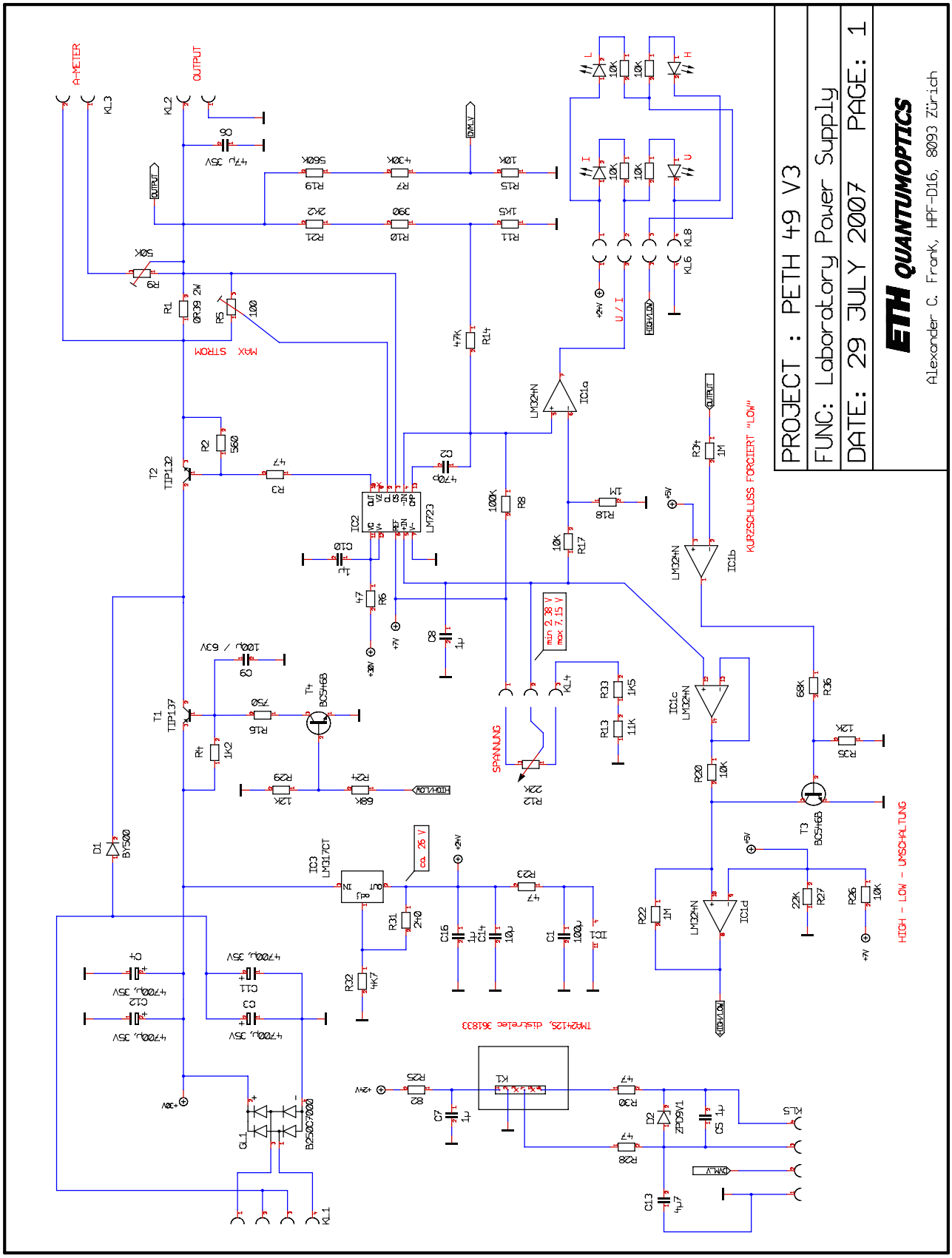
PROJECT : PETH 49 V3
FUNC: Laboratory Power Supply
DATE: 29 JULY 2007 PAGE: 1
ETH QUANTUMOPTICS
Alexander C. Frank, HPF-D16, 8093 Zürich
A-METER
OUTPUT
MAX STROM
SPANNUNG
KURZSCHLUSS FORCIERT "LOW"
HIGH - LOW - UMSCHALTUNG
TM24125, disjunctee 36833

Printplatte / Bestückungsplan

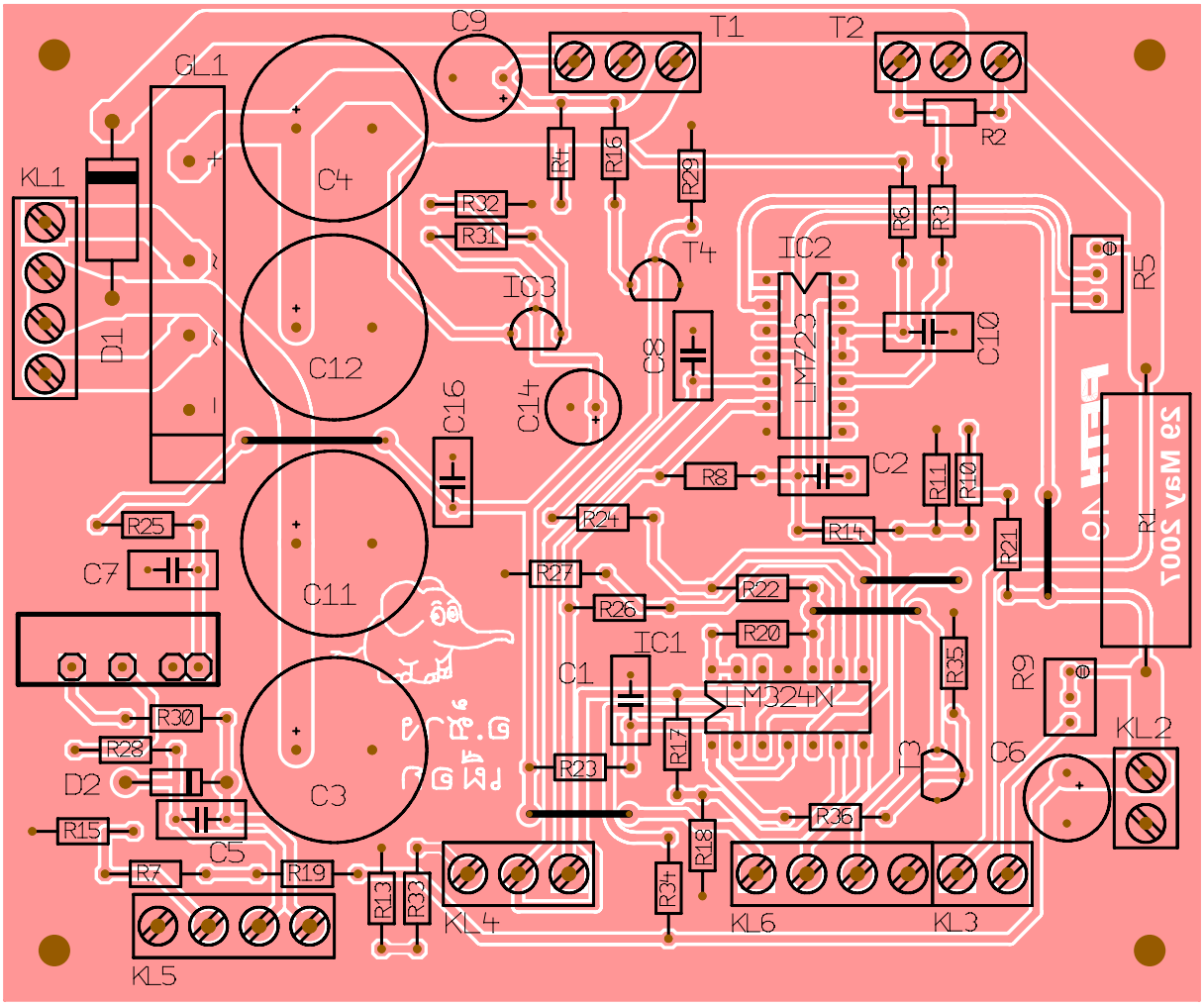

Hauptplatine (oben) und LED-Anzeige bzw. TO-220 Adapter (unten)

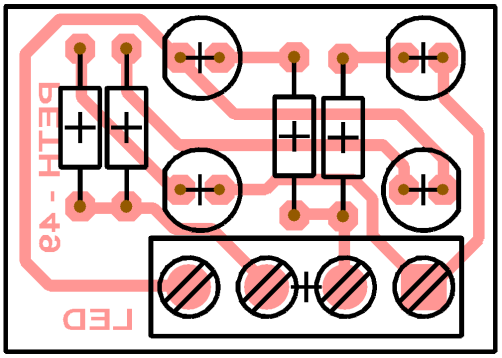

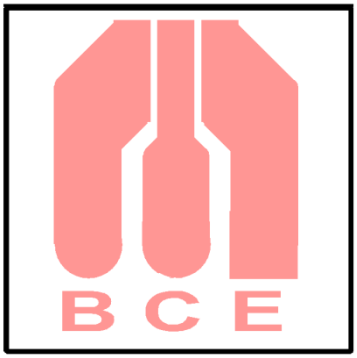

Bei Verwendung von Europakarten kann die Adapterplatine (rechts) sehr hilfreich sein, sie dient dem Anschluss der auf dem Kühlkörper montierten Leistungstransistoren (zwei Stück erforderlich).

Die LED-Platine (links) wird mit vier LED's (2mA) und 4 x 10 kΩ bestückt.

Printplatte

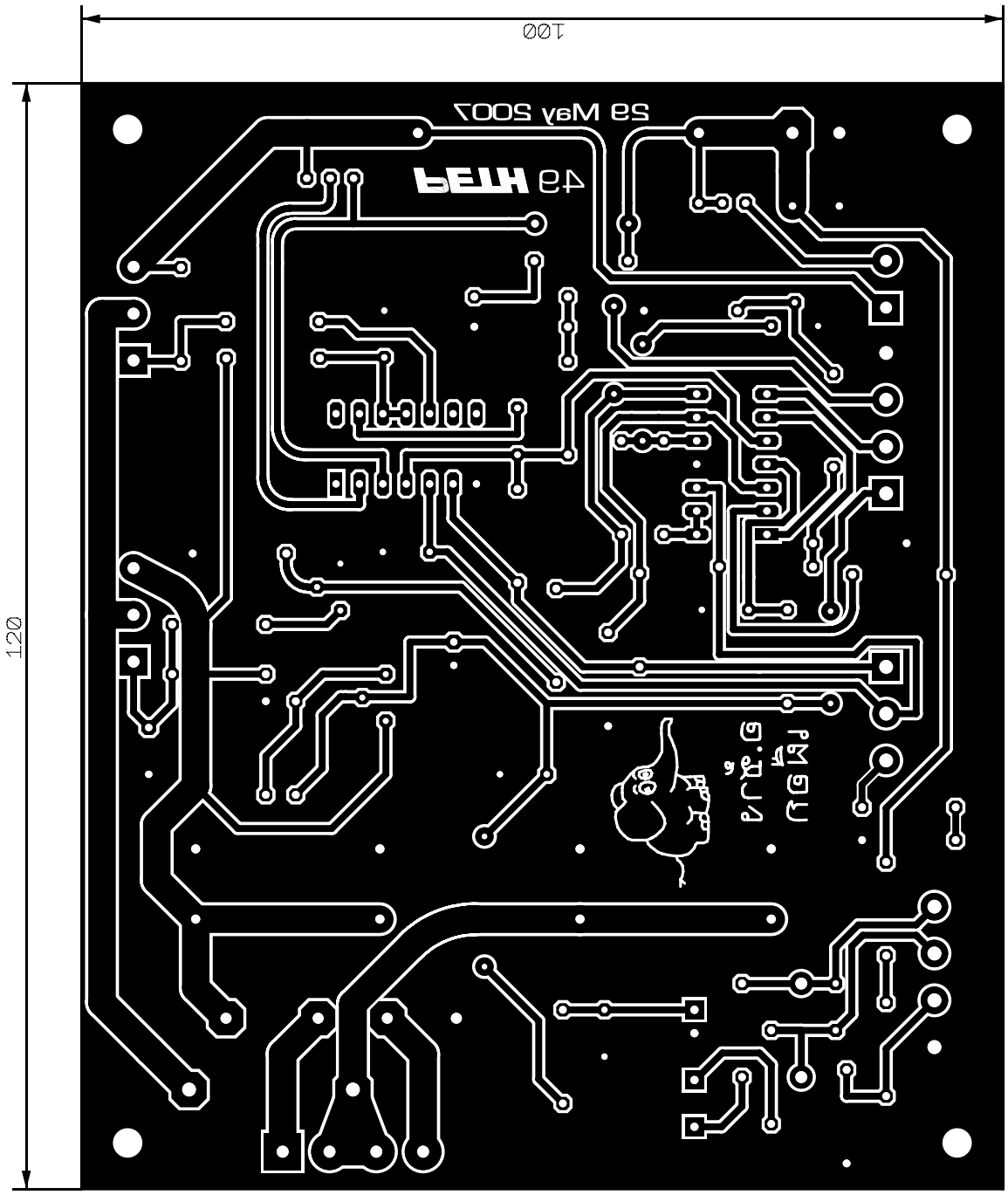

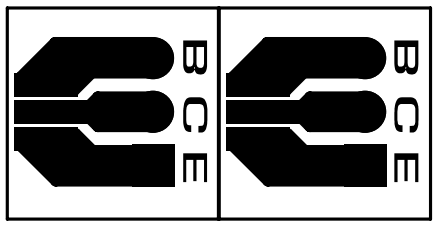

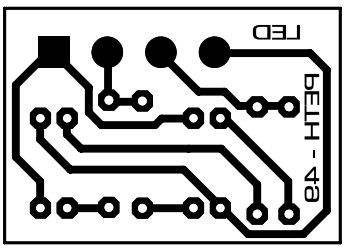

Schrift (PETH49, 29May2007) muss von der Kupferseite aus lesbar sein !

Stückliste (PCB)

Pos	Name	Wert	Gehäuse	Wert neu	Best.-Nr.:	Preis
1	C1	100µ	C2	2u2	822161	0.65
2	C2	470p	C2			
3	C3	4700µ,35V	ELKO7.5-18.5		802599	2.85
4	C4	4700µ,35V	ELKO7.5-18.5		802599	2.85
5	C5	1µ	C2	2u2	822161	0.65
6	C6	47µ 35V	ELKO5-8.5		801213	1.51
7	C7	1µ	C2	2u2	822161	0.65
8	C8	1µ	C2	2u2	822161	0.65
9	C9	100µ / 63V	ELKO5-8.5		801213	1.51
10	C10	1µ	C2	2u2	822161	0.65
11	C11	4700µ,35V	ELKO7.5-18.5		802599	2.85
12	C12	4700µ,35V	ELKO7.5-18.5		802599	2.85
13	C13	4µ7			802638	0.86
14	C14	1µ	ELKO2.5-7.5	2u2	822161	0.65
15	C16	1µ	C2	2u2	822161	0.65
16	D1	BY500	D7	PS 301R	Lager ELL	
17	D2	ZPD9V1	D4			
19	LED	GRN	LED2ST			
20	LED	GRN	LED2ST			
21	LED	GRN	LED2ST			
25	LED	GRN	LED2ST			
26	10k	R4	R4			
27	10k	R4	R4			
28	10k	R4	R4			
29	10k	R4	R4			
30	GL1	B250C7000	BRÜCKE2B			
31	IC1	LM324N / TL074	DIL14			
32	IC2	LM723	DIL14			
33	IC3	LM317	**TO-92C**		649225	0.75
42	R1	0R39 2W	R8			
43	R2	560	R4			
44	R3	47	R4			
45	R4	1k2	R4			
46	R5	100	64W		740016	2.15
47	R6	47	R4			
48	R7	430k	R4			
49	R8	100k	R4			
50	R9	50K	64W		743305	2.26
51	R10	390	R4			
52	R11	1k5	R4			
53	R12	22k	Potentiometer	distrelec	742710	2.42
54	R13	11k	R4			
55	R14	47k	R4			
56	R15	10k	R4			
57	R16	750	R4			
58	R17	10k	R4			
59	R18	1M	R4			
60	R19	560k	R4			
61	R20	10k	R4			
62	R21	2k2	R4			
63	R22	1M	R4			

64	R23	47	R4			
65	R24	68k	R4			
66	R25	82	R4			
67	R26	10k	R4			
68	R27	22k	R4			
69	R28	47	R4			
70	R29	12k	R4			
71	R30	47	R4			
72	R31	240	R4			
73	R32	4k7	R4			
74	R33	1k5	R4			
75	R34	1M	R4			
76	R35	12k	R4			
77	R36	68k	R4			
78	T1	TIP137	TO-220			
79	T2	TIP132	TO-220			
80	T3	BC546B	TO-92C			
81	T4	BC546B	TO-92C			
82	DC/DC-Wandler	TMA2412S	SIL-4X	distrelec	361833	12.91

Und was sonst noch erforderlich ist :

	Trafo	2 x 12 V		Reichelt	RKT 5012	
	Gehäuse			Lager ELL		
	Montagesatz			Lager ELL		
	Netzschalter			Lager ELL		
	LCD-Modul	200 mV	m. Bel.			
	Drehspulinstr.	50 uA				
	Knopf	passend zu Poti				
	Buchsen	4 mm		Lager ELL		

Gehäuse

Als Gehäuse dient das von ELV angebotene ***Serie 7000*** Gehäuse.

Es ist in vielen Farben erhältlich. Schau dir die Muster im Elektrolager an und entscheide dich dann.

Hersteller : www.elv.de, Best.-Nr.: 70-390-25 (schwarz) oder
Best.-Nr.: 70-355-99 (grau) oder Best.-Nr.: 70-044-91 (glasklar).

Es sind stets zwei Gehäusehalbschalen und ein Montagesatz erforderlich.

Die nachfolgende Frontplatte / Rückwand ist passend zu diesem Gehäuse.

Bei Verwendung anderer Gehäuse sind jene entsprechend anzupassen.

Frontplatte

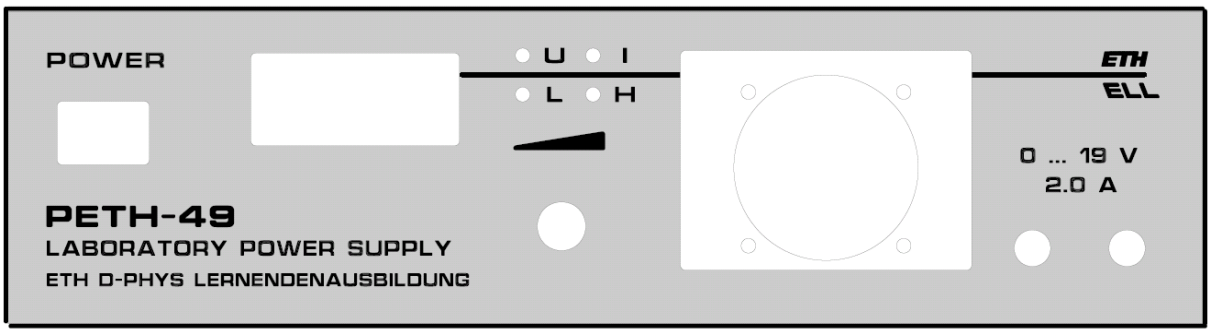

Die Frontplatte hat die Grösse 246 x 64 mm.

Du kannst die im Anhang angegebene Vorlage verwenden oder dir deine eigene Frontplatte entwerfen.

Dazu kannst du die Software von http://www.schaeffer-ag.de verwenden. (Frontplattendesigner, gratis)

Die Frontplatte kannst du von http://www.changpuak.ch/electronics herunterladen. (Projekt: PETH-49 Power Supply)

Rückwand

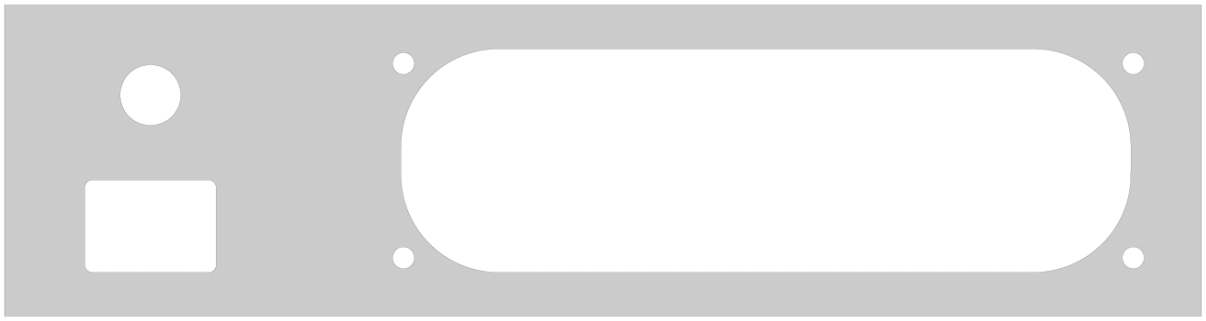

Die Rückwand hat die Grösse 246 x 64 mm.

Du brauchst hier im Wesentlichen drei Ausschnitte. Einen für den Sicherungshalter, einen für den Kaltgerätestecker und einen, um die Leistungstransistoren direkt an den Kühlkörper schrauben zu können.

Im Anhang ist eine Masshaltige Abbildung.

LCD-Modul

Das LCD-Modul ist von Reichelt. Es kann Spannungen von +/- 200 mV anzeigen. Best.-Nr.: LDP-340 LCD
Lieferant: http://www.reichelt.de

Das Datenblatt ist im Anhang.

Du musst eine Brücke (P2) einlöten um den Dezimalpunkt an der richtigen Stelle anzuzeigen.

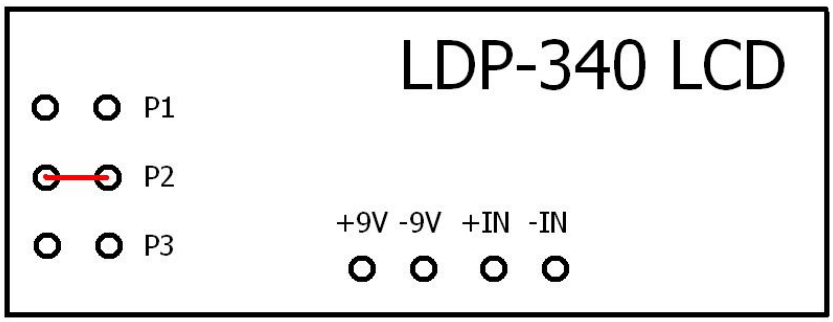

Abb. links :

Anschlüsse des LCD Voltmeters.

Drehspulinstrument / Skala

Das Drehspulinstrument ist von Monacor. Es kann Ströme im Bereich 0…50 µA anzeigen. (Siehe Abschnitt Inbetriebnahme)

Du kannst die im Anhang angegebene Skala verwenden oder deine eigene entwerfen.

Du brauchst dazu die Software von :
http://tonnesoftware.com/meter.html (gratis)

Die vorgeschlagene Skala findest du bei
http://www.changpuak.ch/electronics
(Projekt: PETH-49 Power Supply)

Bodenplatte

Die Bodenplatte hat die Grösse 232 x 110 mm.
Du kannst auch andere Grössen verwenden.

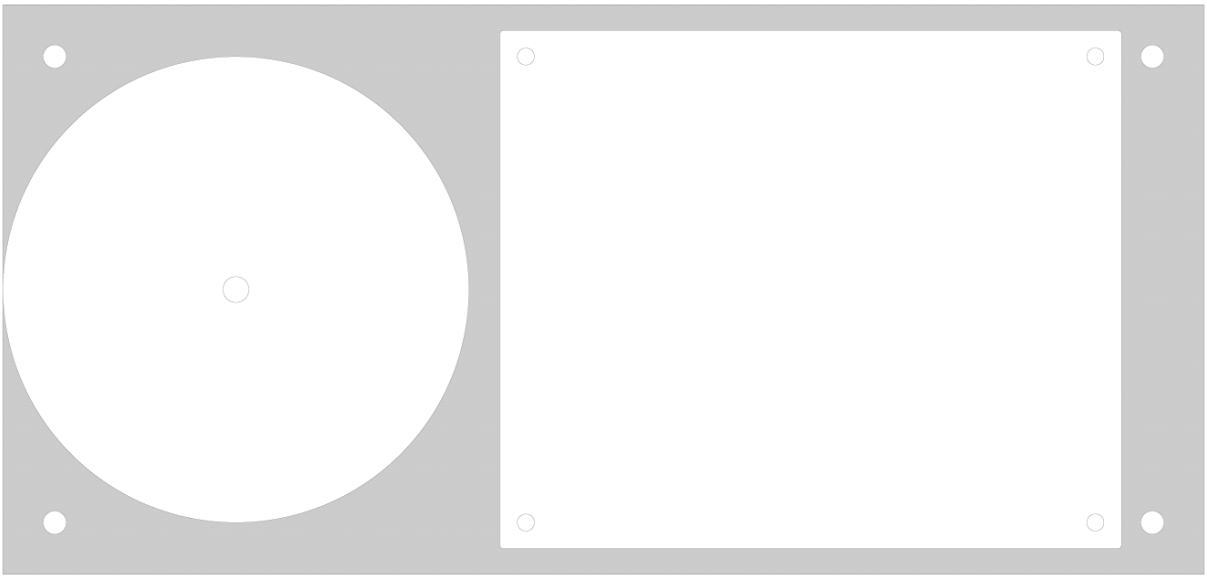

Eine Masshaltige Abbildung findet sich im Anhang.

Das Blech sollte eine Dicke von 2.5 mm +/- 0.5 haben. Wenn du ein Gehäuse aus Plexiglas nimmst, wäre auch ein Boden aus Plexiglas möglich – man kann dann die Platine von unten sehen. (d ~ 4 mm)

Kühlkörper

Der Kühlkörper ist von Reichelt. Er misst 50 x 160 x 40 mm.
Best.-Nr.: V6506E. Lieferant: http://www.reichelt.de

R_{th} = 1.2 K/W (thermischer Widerstand)

Das bedeutet, dass pro Watt Verlustleistung eine Temperaturerhöhung von 1.2 Kelvin (oder Grad Celsius) stattfindet.

Nehmen wir an, dass die Ausgangsspannung 13.8 V sei und der Laststrom betrage 1.0 A. Die Transistoren müssen dann eine Leistung von
(24V * 1.4142) – (2 * 0.6 V) (Gleichrichter) * 1.0 A
= (32.741 – 13.8) * 1 A in Wärme umwandeln.

Das entspricht 18.941 W. Der Kühlkörper erwärmt sich dann auf T=25^{0}C (Raumtemperatur) + 18.941 * 1.2 K/W also 47.729 ^{0}C.

Auf welche Temperatur erwärmt sich der Kühlkörper, wenn U_A = 5.2 V und I_A = 1.8 A beträgt ?
(Netzteil schaltet auf "LOW" !)

Lösung : P_V = (12 V * 1.4142 – 0.6 V – 5.2 V) * 1.8 A

$\delta T = P_V * 1.2$ K/W = 24.128 ^{0}C

T_{abs} = 25 ^{0}C + δT = 49.128 ^{0}C

Abb. rechts :

Bild des Kühlkörpers.

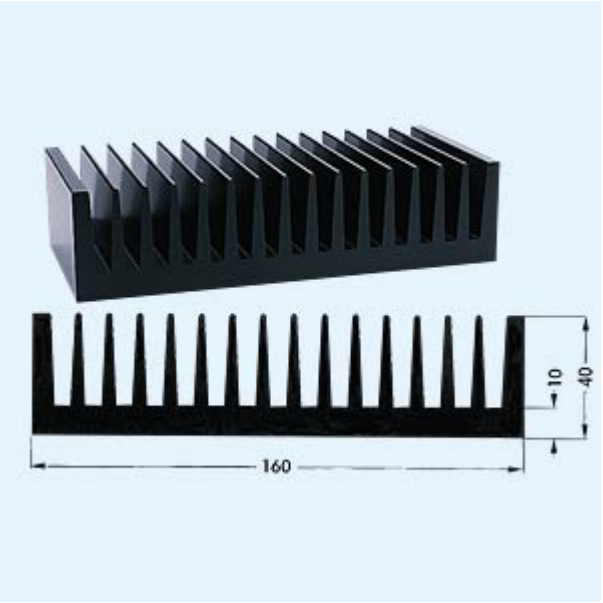

Verdrahtungsplan

Der in der Industrie übliche Verdrahtungsplan kannst du leicht selbst herstellen. Mache dies als Übung hier selbst.

Start	Ziel	Signal	Farbe	mm^2	Bemerkung

Inbetriebnahme

Wenn das Gerät komplett zusammengebaut ist, können wir es in Betrieb nehmen.

Stelle dazu den Trimmer (R5) für die Strombegrenzung ganz nach links.

Stelle den Trimmer (R9) für die Stromanzeige ganz nach links.

Drehe das Potentiometer für die Spannung ganz nach links.

Schliesse das Netzteil mit einem Regel-Trenntrafo an das 230V Netz an.

Drehe nun die Spannung langsam in Richtung 230V (100%).

Wenn der Strom plötzlich stark steigt liegt ein Fehler vor !

Prüfe nochmals alle Verbindungen.

Wenn der Strom klein bleibt (~20 mA) dann scheint kein Fehler vorzuliegen. Schliesse nun einen Lastwiderstand von 10 Ω / ≥ 20W an.

Drehe den Spannungsregler nach rechts, bis das LCD 10.0 V anzeigt.

Drehe nun den Widerstand R9 soweit nach rechts, bis das Drehspulinstrument 1.0 A anzeigt.

Falls keine LED leuchtet :

Orientierung kontrollieren !

Die auf dem Layout flache Seite kennzeichnet die Kathode.

Dieser Ansschluss (***K***athode) ist auch ***k***ürzer.

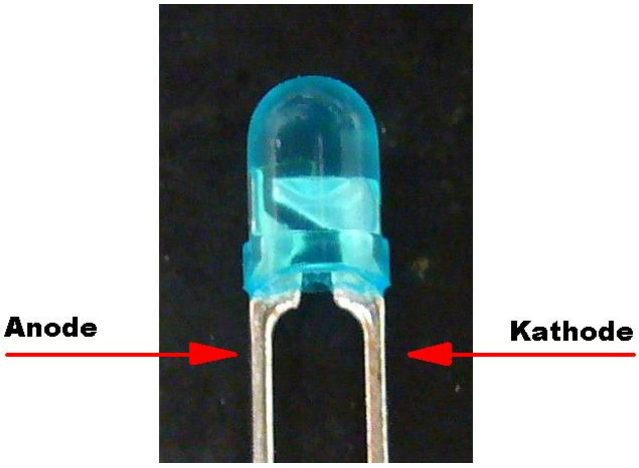

Anhang

Wichtiger Hinweis :

Viele Datenblätter sind nur auszugsweise wiedergegeben, um die wichtigsten Merkmale schnell griffbereit zu haben.

Falls ausführliche Datenblätter gewünscht sind, so möge man sie sich direkt auf der Webpage des Herstellers beschaffen.

Datenblatt LM 723 (Auszug) 18

Datenblatt LM 317 (Auszug) 22

Datenblatt TIP 132 / TIP 137 31

Datenblatt BC 546 (Auszug) 33

Datenblatt TL 074 (Auszug) 37

Datenblatt LCD 41

Frontplatte (Masshaltige Zeichnung) 42

Rückwand (Masshaltige Zeichnung) 43

Bodenplatte (Masshaltige Zeichnung) 44

Skala (Masshaltige Zeichnung) 45

DC/DC Wandler (TMA2412S) 47

Datenblatt LM723 (Auszug)

National Semiconductor

June 1999

LM723/LM723C
Voltage Regulator

General Description

The LM723/LM723C is a voltage regulator designed primarily for series regulator applications. By itself, it will supply output currents up to 150 mA; but external transistors can be added to provide any desired load current. The circuit features extremely low standby current drain, and provision is made for either linear or foldback current limiting.

The LM723/LM723C is also useful in a wide range of other applications such as a shunt regulator, a current regulator or a temperature controller.

The LM723C is identical to the LM723 except that the LM723C has its performance guaranteed over a 0˚C to +70˚C temperature range, instead of −55˚C to +125˚C.

Features

- 150 mA output current without external pass transistor
- Output currents in excess of 10A possible by adding external transistors
- Input voltage 40V max
- Output voltage adjustable from 2V to 37V
- Can be used as either a linear or a switching regulator

Connection Diagrams

Dual-In-Line Package

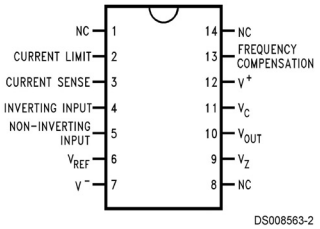

Top View
Order Number LM723J/883 or LM723CN
See NS Package J14A or N14A

Metal Can Package

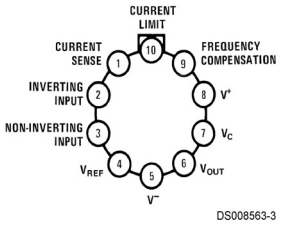

Note: Pin 5 connected to case.

Top View
Order Number LM723H, LM723H/883 or LM723CH
See NS Package H10C

© 1999 National Semiconductor Corporation DS008563 www.national.com

Connection Diagrams (Continued)

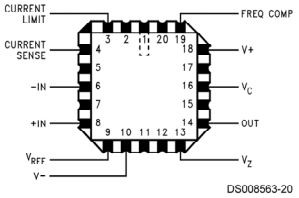

Top View
Order Number LM723E/883
See NS Package E20A

Equivalent Circuit*

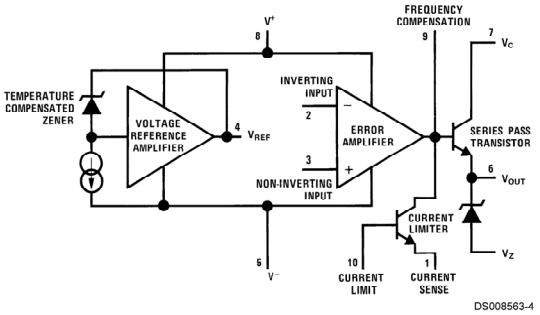

*Pin numbers refer to metal can package.

Typical Application

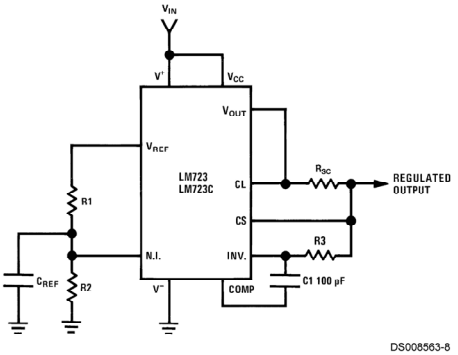

Note: $R3 = \frac{R1\,R2}{R1 + R2}$

for minimum temperature drift.

Typical Performance

Regulated Output Voltage	5V
Line Regulation (ΔV_{IN} = 3V)	0.5mV
Load Regulation (ΔI_L = 50 mA)	1.5mV

FIGURE 1. Basic Low Voltage Regulator (V_{OUT} = 2 to 7 Volts)

Absolute Maximum Ratings (Note 1)

If Military/Aerospace specified devices are required, please contact the National Semiconductor Sales Office/ Distributors for availability and specifications.

(Note 10)

Pulse Voltage from V^+ to V^- (50 ms)	50V
Continuous Voltage from V^+ to V^-	40V
Input-Output Voltage Differential	40V
Maximum Amplifier Input Voltage (Either Input)	8.5V
Maximum Amplifier Input Voltage (Differential)	5V
Current from V_Z	25 mA
Current from V_{REF}	15 mA
Internal Power Dissipation	
Metal Can (Note 2)	800 mW
Cavity DIP (Note 2)	900 mW
Molded DIP (Note 2)	660 mW
Operating Temperature Range	
LM723	−55°C to +150°C
LM723C	0°C to +70°C
Storage Temperature Range	
Metal Can	−65°C to +150°C
Molded DIP	−55°C to +150°C
Lead Temperature (Soldering, 4 sec. max.)	
Hermetic Package	300°C
Plastic Package	260°C
ESD Tolerance	1200V
(Human body model, 1.5 kΩ in series with 100 pF)	

Electrical Characteristics (Note 3) (Note 10)

Parameter	Conditions	LM723			LM723C			Units
		Min	Typ	Max	Min	Typ	Max	
Line Regulation	V_{IN} = 12V to V_{IN} = 15V		0.01	0.1		0.01	0.1	% V_{OUT}
	−55°C ≤ T_A ≤ +125°C			0.3				% V_{OUT}
	0°C ≤ T_A ≤ +70°C						0.3	% V_{OUT}
	V_{IN} = 12V to V_{IN} = 40V		0.02	0.2		0.1	0.5	% V_{OUT}
Load Regulation	I_L = 1 mA to I_L = 50 mA		0.03	0.15		0.03	0.2	% V_{OUT}
	−55°C ≤ T_A ≤ +125°C			0.6				% V_{OUT}
	0°C ≤ T_A ≤ +70°C						0.6	% V_{OUT}
Ripple Rejection	f = 50 Hz to 10 kHz, C_{REF} = 0		74			74		dB
	f = 50 Hz to 10 kHz, C_{REF} = 5 μF		86			86		dB
Average Temperature Coeffic-	−55°C ≤ T_A ≤ +125°C		0.002	0.015				%/°C
ient of Output Voltage (Note 8)	0°C ≤ T_A ≤ +70°C					0.003	0.015	%/°C
Short Circuit Current Limit	R_{SC} = 10Ω, V_{OUT} = 0		65			65		mA
Reference Voltage		6.95	7.15	7.35	6.80	7.15	7.50	V
Output Noise Voltage	BW = 100 Hz to 10 kHz, C_{REF} = 0		86			86		μVrms
	BW = 100 Hz to 10 kHz, C_{REF} = 5 μF		2.5			2.5		μVrms
Long Term Stability			0.05			0.05		%/1000 hrs
Standby Current Drain	I_L = 0, V_{IN} = 30V		1.7	3.5		1.7	4.0	mA
Input Voltage Range		9.5		40	9.5		40	V
Output Voltage Range		2.0		37	2.0		37	V
Input-Output Voltage Differential		3.0		38	3.0		38	V
θ_{JA}	Molded DIP					105		°C/W
θ_{JA}	Cavity DIP		150					°C/W
θ_{JA}	H10C Board Mount in Still Air		165			165		°C/W
θ_{JA}	H10C Board Mount in 400 LF/Min Air Flow		66			66		°C/W
θ_{JC}			22			22		°C/W

Note 1: "Absolute Maximum Ratings" indicate limits beyond which damage to the device may occur. Operating Ratings indicate conditions for which the device is functional, but do not guarantee specific performance limits.

Note 2: See derating curves for maximum power rating above 25°C.

Note 3: Unless otherwise specified, T_A = 25°C, V_{IN} = V^+ = V_C = 12V, V^- = 0, V_{OUT} = 5V, I_L = 1 mA, R_{SC} = 0, C_1 = 100 pF, C_{REF} = 0 and divider impedance as seen by error amplifier ≤ 10 kΩ connected as shown in *Figure 1*. Line and load regulation specifications are given for the condition of constant chip temperature. Temperature drifts must be taken into account separately for high dissipation conditions.

Note 4: L_1 is 40 turns of No. 20 enameled copper wire wound on Ferroxcube P36/22-3B7 pot core or equivalent with 0.009 in. air gap.

Note 5: Figures in parentheses may be used if R1/R2 divider is placed on opposite input of error amp.

Note 6: Replace R1/R2 in figures with divider shown in *Figure 13*.

Note 7: V^+ and V_{CC} must be connected to a +3V or greater supply.

Note 8: For metal can applications where V_Z is required, an external 6.2V zener diode should be connected in series with V_{OUT}.

Electrical Characteristics (Note 3) (Note 10) (Continued)

Note 9: Guaranteed by correlation to other tests.

Note 10: A military RETS specification is available on request. At the time of printing, the LM723 RETS specification complied with the Min and Max limits in this table. The LM723E, H, and J may also be procured as a Standard Military Drawing.

Typical Performance Characteristics

Load Regulation Characteristics with Current Limiting

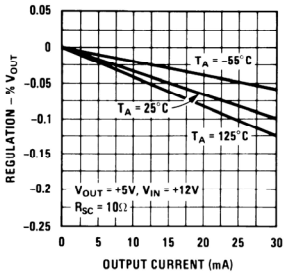

DS008563-22

Load Regulation Characteristics with Current Limiting

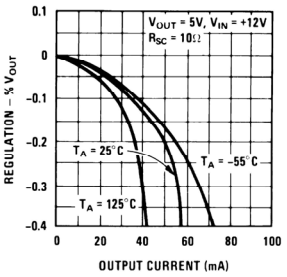

DS008563-23

Load & Line Regulation vs Input-Output Voltage Differential

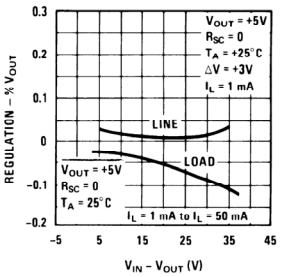

DS008563-24

Current Limiting Characteristics

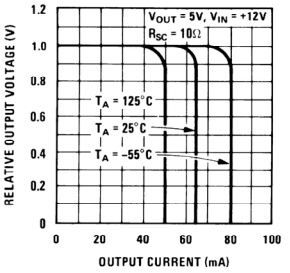

DS008563-25

Current Limiting Characteristics vs Junction Temperature

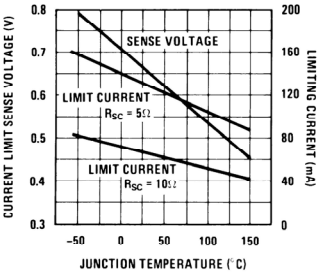

DS008563-26

Standby Current Drain vs Input Voltage

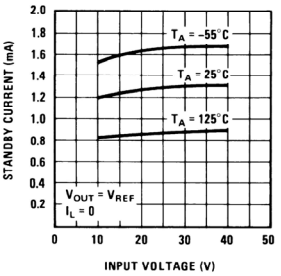

DS008563-27

Line Transient Response

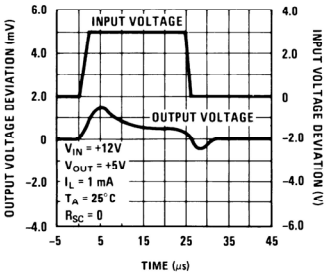

DS008563-28

Load Transient Response

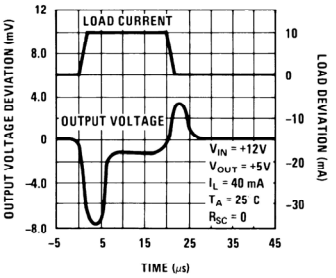

DS008563-29

Output Impedence vs Frequency

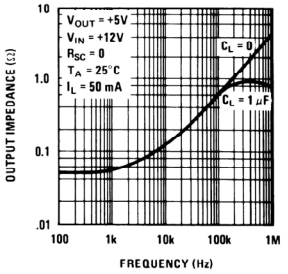

DS008563-30

National Semiconductor

April 2007

LM117/LM317A/LM317 3-Terminal Adjustable Regulator

General Description

The LM117 series of adjustable 3-terminal positive voltage regulators is capable of supplying in excess of 1.5A over a 1.2V to 37V output range. They are exceptionally easy to use and require only two external resistors to set the output voltage. Further, both line and load regulation are better than standard fixed regulators. Also, the LM117 is packaged in standard transistor packages which are easily mounted and handled.

In addition to higher performance than fixed regulators, the LM117 series offers full overload protection available only in IC's. Included on the chip are current limit, thermal overload protection and safe area protection. All overload protection circuitry remains fully functional even if the adjustment terminal is disconnected.

Normally, no capacitors are needed unless the device is situated more than 6 inches from the input filter capacitors in which case an input bypass is needed. An optional output capacitor can be added to improve transient response. The adjustment terminal can be bypassed to achieve very high ripple rejection ratios which are difficult to achieve with standard 3-terminal regulators.

Besides replacing fixed regulators, the LM117 is useful in a wide variety of other applications. Since the regulator is "floating" and sees only the input-to-output differential voltage, supplies of several hundred volts can be regulated as long as the maximum input to output differential is not exceeded, i.e., avoid short-circuiting the output.

Also, it makes an especially simple adjustable switching regulator, a programmable output regulator, or by connecting a fixed resistor between the adjustment pin and output, the LM117 can be used as a precision current regulator. Supplies with electronic shutdown can be achieved by clamping the adjustment terminal to ground which programs the output to 1.2V where most loads draw little current.

For applications requiring greater output current, see LM150 series (3A) and LM138 series (5A) data sheets. For the negative complement, see LM137 series data sheet.

Features

- Guaranteed 1% output voltage tolerance (LM317A)
- Guaranteed max. 0.01%/V line regulation (LM317A)
- Guaranteed max. 0.3% load regulation (LM117)
- Guaranteed 1.5A output current
- Adjustable output down to 1.2V
- Current limit constant with temperature
- P+ Product Enhancement tested
- 80 dB ripple rejection
- Output is short-circuit protected

Typical Applications

1.2V–25V Adjustable Regulator

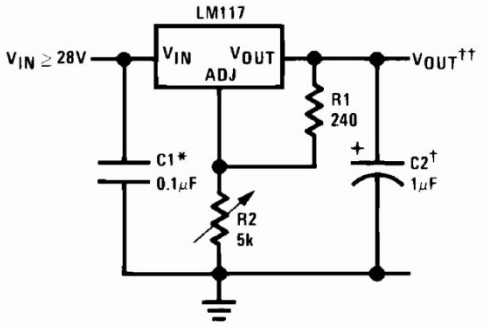

906301

Full output current not available at high input-output voltages

*Needed if device is more than 6 inches from filter capacitors.

†Optional—improves transient response. Output capacitors in the range of 1μF to 1000μF of aluminum or tantalum electrolytic are commonly used to provide improved output impedance and rejection of transients.

$$\dagger\dagger V_{OUT} = 1.25V\left(1 + \frac{R2}{R1}\right) + I_{ADJ}(R_2)$$

LM117/LM317A/LM317 Package Options

Part Number	Suffix	Package	Output Current
LM117, LM317	K	TO-3	1.5A
LM317	T	TO-220	1.5A
LM317	S	TO-263	1.5A
LM317A, LM317	EMP	SOT-223	1.0A
LM117, LM317A, LM317	H	TO-39	0.5A
LM117	E	LCC	0.5A
LM317A, LM317	MDT	TO-252	0.5A

SOT-223 vs. TO-252 (D-Pak) Packages

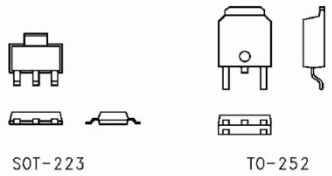

906354

Scale 1:1

© 2007 National Semiconductor Corporation 9063

Connection Diagrams

TO-3 (K)
Metal Can Package

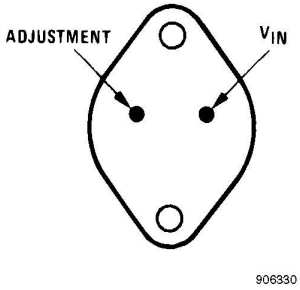

CASE IS OUTPUT

Bottom View
Steel Package
NS Package Number K02A or K02C

TO-39 (H)
Metal Can Package

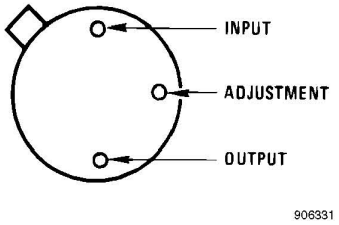

CASE IS OUTPUT

Bottom View
NS Package Number H03A

TO-263 (S)
Surface-Mount Package

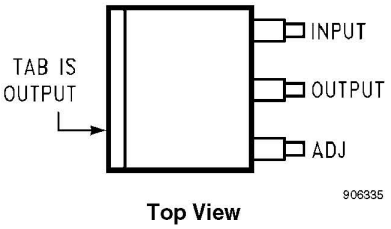

Top View

TO-220 (T)
Plastic Package

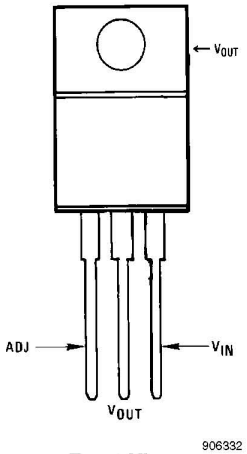

Front View
NS Package Number T03B

TO-263 (S)
Surface-Mount Package

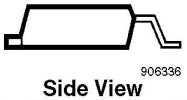

Side View
NS Package Number TS3B

Ceramic Leadless
Chip Carrier (E)

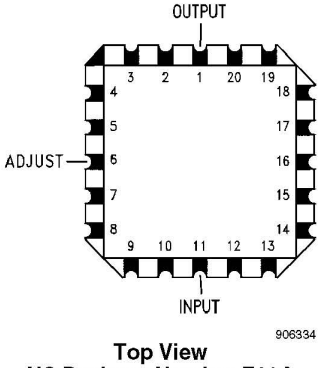

Top View
NS Package Number E20A

Absolute Maximum Ratings (Note 1)

If Military/Aerospace specified devices are required, please contact the National Semiconductor Sales Office/ Distributors for availability and specifications.

Power Dissipation	Internally Limited
Input-Output Voltage Differential	+40V, −0.3V
Storage Temperature	−65°C to +150°C
Lead Temperature	
Metal Package (Soldering, 10 seconds)	300°C
Plastic Package (Soldering, 4 seconds)	260°C
ESD Tolerance (Note 5)	3 kV

Operating Temperature Range

LM117	$-55°C \le T_J \le +150°C$
LM317A	$-40°C \le T_J \le +125°C$
LM317	$0°C \le T_J \le +125°C$

Preconditioning

Thermal Limit Burn-In	All Devices 100%

LM117 Electrical Characteristics (Note 3)

Specifications with standard type face are for T_J = 25°C, and those with **boldface type** apply over **full Operating Temperature Range**. Unless otherwise specified, $V_{IN} - V_{OUT}$ = 5V, and I_{OUT} = 10 mA.

Parameter	Conditions	LM117 (Note 2)			
		Min	Typ	Max	Units
Reference Voltage	3V ≤ ($V_{IN} - V_{OUT}$) ≤ 40V, 10 mA ≤ I_{OUT} ≤ I_{MAX}	**1.20**	**1.25**	**1.30**	V
Line Regulation	3V ≤ ($V_{IN} - V_{OUT}$) ≤ 40V (Note 4)		0.01 **0.02**	0.02 **0.05**	%/V
Load Regulation	10 mA ≤ I_{OUT} ≤ I_{MAX} (Note 4)		0.1 **0.3**	0.3 **1**	%
Thermal Regulation	20 ms Pulse		0.03	0.07	%/W
Adjustment Pin Current			**50**	**100**	μA
Adjustment Pin Current Change	10 mA ≤ I_{OUT} ≤ I_{MAX} 3V ≤ ($V_{IN} - V_{OUT}$) ≤ 40V		**0.2**	**5**	μA
Temperature Stability	$T_{MIN} \le T_J \le T_{MAX}$		**1**		%
Minimum Load Current	($V_{IN} - V_{OUT}$) = 40V		**3.5**	**5**	mA
Current Limit	($V_{IN} - V_{OUT}$) ≤ 15V K Package H, E Package	**1.5** **0.5**	**2.2** **0.8**	**3.4** **1.8**	A
	($V_{IN} - V_{OUT}$) = 40V K Package H, E Package	0.3 0.15	0.4 0.20		A
RMS Output Noise, % of V_{OUT}	10 Hz ≤ f ≤ 10 kHz		0.003		%
Ripple Rejection Ratio	V_{OUT} = 10V, f = 120 Hz, C_{ADJ} = 0 μF		**65**		dB
	V_{OUT} = 10V, f = 120 Hz, C_{ADJ} = 10 μF	**66**	**80**		dB
Long-Term Stability	T_J = 125°C, 1000 hrs		0.3	1	%
Thermal Resistance, θ_{JC} Junction-to-Case	K (TO-3) Package H (TO-39) Package E (LCC) Package		2 21 12		°C/W
Thermal Resistance, θ_{JA} Junction-to-Ambient (No Heat Sink)	K (TO-3) Package H (TO-39) Package E (LCC) Package		39 186 88		°C/W

LM317A and LM317 Electrical Characteristics (Note 3)

Specifications with standard type face are for T_J = 25°C, and those with **boldface type** apply over **full Operating Temperature Range**. Unless otherwise specified, $V_{IN} - V_{OUT}$ = 5V, and I_{OUT} = 10 mA.

Parameter	Conditions	LM317A			LM317			
		Min	Typ	Max	Min	Typ	Max	Units
Reference Voltage		1.238	1.250	1.262	-	1.25	-	V
	3V ≤ ($V_{IN} - V_{OUT}$) ≤ 40V, 10 mA ≤ I_{OUT} ≤ I_{MAX}	**1.225**	**1.250**	**1.270**	**1.20**	**1.25**	**1.30**	V
Line Regulation	3V ≤ ($V_{IN} - V_{OUT}$) ≤ 40V (Note 4)		0.005 **0.01**	0.01 **0.02**		0.01 **0.02**	0.04 **0.07**	%/V
Load Regulation	10 mA ≤ I_{OUT} ≤ I_{MAX} (Note 4)		0.1 **0.3**	0.5 **1**		0.1 **0.3**	0.5 **1.5**	%
Thermal Regulation	20 ms Pulse		0.04	0.07		0.04	0.07	%/W
Adjustment Pin Current			**50**	**100**		**50**	**100**	µA
Adjustment Pin Current Change	10 mA ≤ I_{OUT} ≤ I_{MAX} 3V ≤ ($V_{IN} - V_{OUT}$) ≤ 40V		**0.2**	**5**		**0.2**	**5**	µA
Temperature Stability	T_{MIN} ≤ T_J ≤ T_{MAX}		**1**			**1**		%
Minimum Load Current	($V_{IN} - V_{OUT}$) = 40V		**3.5**	**10**		**3.5**	**10**	mA
Current Limit	($V_{IN} - V_{OUT}$) ≤ 15V							
	K, T, S Packages	-	-	-	**1.5**	**2.2**	**3.4**	A
	EMP Package	**1.5**	**2.2**	**3.4**	**1.5**	**2.2**	**3.4**	A
	H, MDT Packages	**0.5**	**0.8**	**1.8**	**0.5**	**0.8**	**1.8**	A
	($V_{IN} - V_{OUT}$) = 40V							
	K, T, S Packages	-	-		0.15	0.40		A
	EMP Package	0.112	0.30		0.112	0.30		A
	H, MDT Packages	0.075	0.20		0.075	0.20		A
RMS Output Noise, % of V_{OUT}	10 Hz ≤ f ≤ 10 kHz		0.003			0.003		%
Ripple Rejection Ratio	V_{OUT} = 10V, f = 120 Hz, C_{ADJ} = 0 µF		**65**			**65**		dB
	V_{OUT} = 10V, f = 120 Hz, C_{ADJ} = 10 µF	**66**	**80**		**66**	**80**		dB
Long-Term Stability	T_J = 125°C, 1000 hrs		0.3	1		0.3	1	%
Thermal Resistance, θ_{JC} Junction-to-Case	K (TO-3) Package		-			2		°C/W
	T (TO-220) Package		-			4		°C/W
	S (TO-263) Package		-			4		°C/W
	EMP (SOT-223) Package		23.5			23.5		°C/W
	H (TO-39) Package		21			21		°C/W
	MDT (TO-252) Package		12			12		°C/W
Thermal Resistance, θ_{JA} Junction-to-Ambient (No Heat Sink)	K (TO-3) Package		-			39		°C/W
	T (TO-220) Package		-			50		°C/W
	S (TO-263) Package (Note 6)		-			50		°C/W
	EMP (SOT-223) Package (Note 6)		140			140		°C/W
	H (TO-39) Package		186			186		°C/W
	MDT (TO-252) Package (Note 6)		103			103		°C/W

Note 1: Absolute Maximum Ratings indicate limits beyond which damage to the device may occur. Operating Ratings indicate conditions for which the device is intended to be functional, but do not guarantee specific performance limits. For guaranteed specifications and test conditions, see the Electrical Characteristics. The guaranteed specifications apply only for the test conditions listed.

Note 2: Refer to RETS117H drawing for the LM117H, or the RETS117K for the LM117K military specifications.

Note 3: I_{MAX} = 1.5A for the K (TO-3), T (TO-220), and S (TO-263) packages. I_{MAX} = 1.0A for the EMP (SOT-223) package. I_{MAX} = 0.5A for the H (TO-39), MDT (TO-252), and E (LCC) packages. Device power dissipation (P_D) is limited by ambient temperature (T_A), device maximum junction temperature (T_J), and package thermal resistance (θ_{JA}). The maximum allowable power dissipation at any temperature is : $P_{D(MAX)} = ((T_{J(MAX)} - T_A)/\theta_{JA})$. All Min. and Max. limits are guaranteed to National's Average Outgoing Quality Level (AOQL).

Note 4: Regulation is measured at a constant junction temperature, using pulse testing with a low duty cycle. Changes in output voltage due to heating effects are covered under the specifications for thermal regulation.

Note 5: Human body model, 100 pF discharged through a 1.5 kΩ resistor.

Note 6: When surface mount packages are used (TO-263, SOT-223, TO-252), the junction to ambient thermal resistance can be reduced by increasing the PC board copper area that is thermally connected to the package. See the Applications Hints section for heatsink techniques.

Typical Performance Characteristics

Output Capacitor = 0 µF unless otherwise noted

Load Regulation

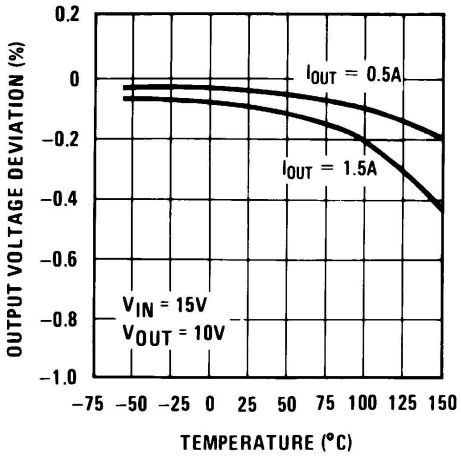

906337

Current Limit

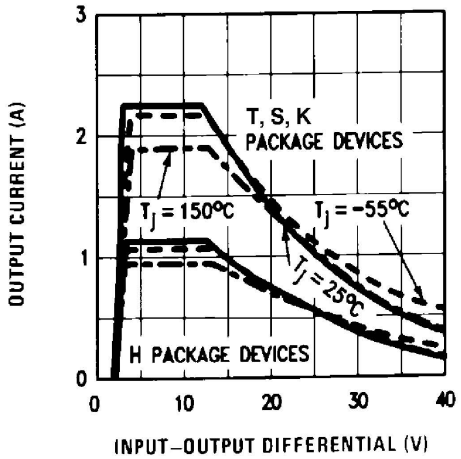

906338

Adjustment Current

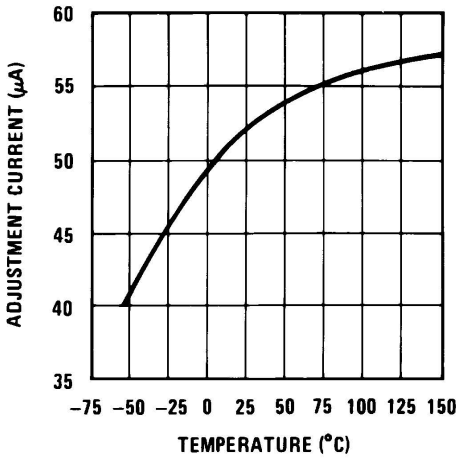

906339

Dropout Voltage

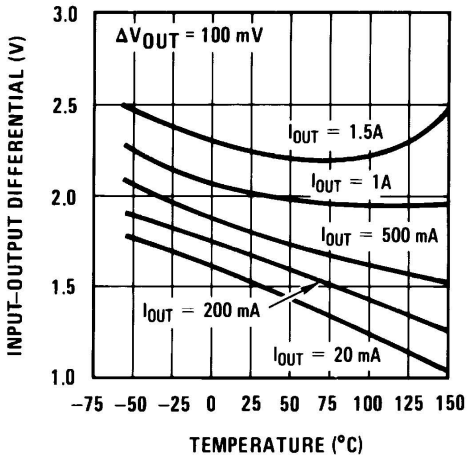

906340

Temperature Stability

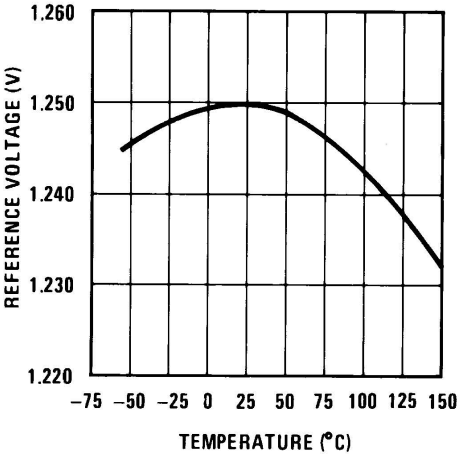

906341

Minimum Operating Current

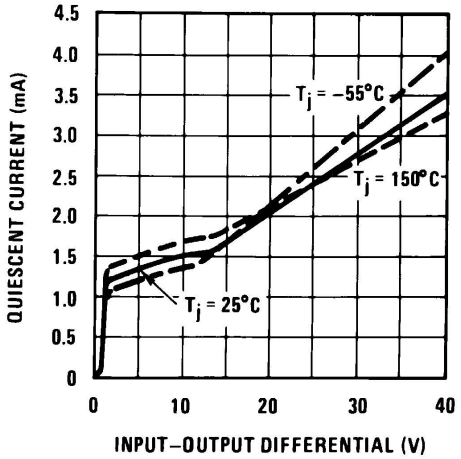

906342

Ripple Rejection

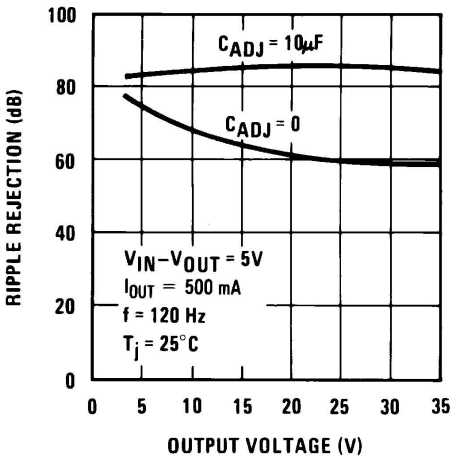

906343

Ripple Rejection

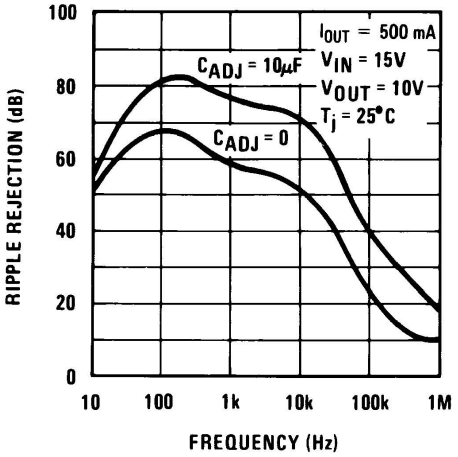

906344

Ripple Rejection

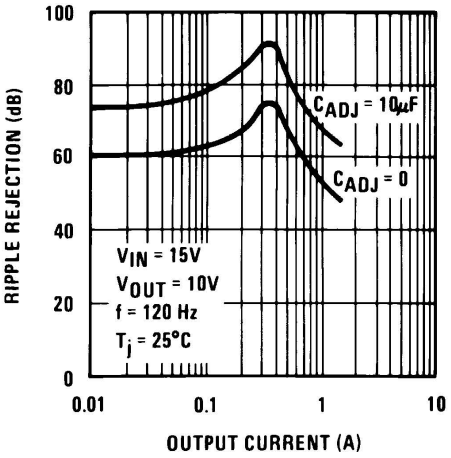

906345

Output Impedance

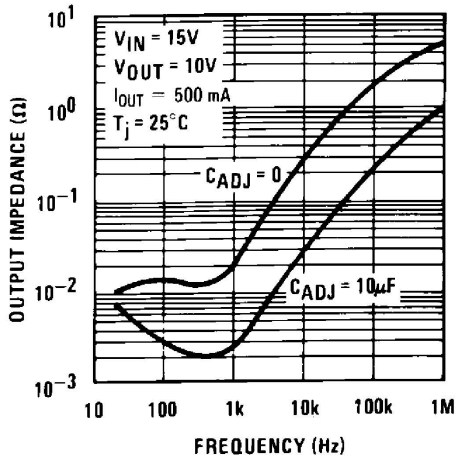

906346

Line Transient Response

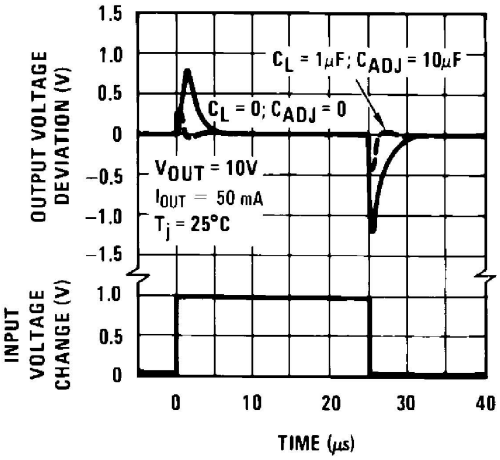

906347

Load Transient Response

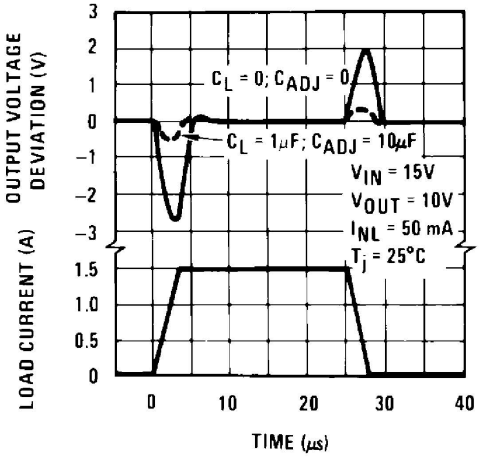

906348

Application Hints

In operation, the LM117 develops a nominal 1.25V reference voltage, V_{REF}, between the output and adjustment terminal. The reference voltage is impressed across program resistor R1 and, since the voltage is constant, a constant current I_1 then flows through the output set resistor R2, giving an output voltage of

$$V_{OUT} = V_{REF}\left(1 + \frac{R2}{R1}\right) + I_{ADJ}R2 \quad (1)$$

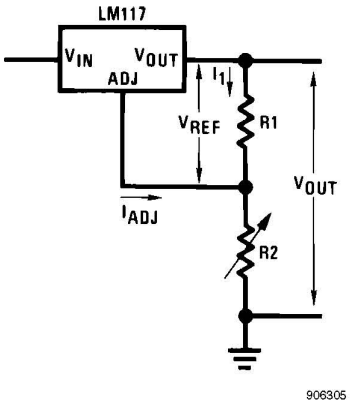

FIGURE 1.

Since the 100μA current from the adjustment terminal represents an error term, the LM117 was designed to minimize I_{ADJ} and make it very constant with line and load changes. To do this, all quiescent operating current is returned to the output establishing a minimum load current requirement. If there is insufficient load on the output, the output will rise.

EXTERNAL CAPACITORS

An input bypass capacitor is recommended. A 0.1μF disc or 1μF solid tantalum on the input is suitable input bypassing for almost all applications. The device is more sensitive to the absence of input bypassing when adjustment or output capacitors are used but the above values will eliminate the possibility of problems.

The adjustment terminal can be bypassed to ground on the LM117 to improve ripple rejection. This bypass capacitor prevents ripple from being amplified as the output voltage is increased. With a 10 μF bypass capacitor 80dB ripple rejection is obtainable at any output level. Increases over 10 μF do not appreciably improve the ripple rejection at frequencies above 120Hz. If the bypass capacitor is used, it is sometimes necessary to include protection diodes to prevent the capacitor from discharging through internal low current paths and damaging the device.

In general, the best type of capacitors to use is solid tantalum. Solid tantalum capacitors have low impedance even at high frequencies. Depending upon capacitor construction, it takes about 25 μF in aluminum electrolytic to equal 1μF solid tantalum at high frequencies. Ceramic capacitors are also good at high frequencies; but some types have a large decrease in capacitance at frequencies around 0.5 MHz. For this reason, 0.01 μF disc may seem to work better than a 0.1 μF disc as a bypass.

Although the LM117 is stable with no output capacitors, like any feedback circuit, certain values of external capacitance can cause excessive ringing. This occurs with values between 500 pF and 5000 pF. A 1 μF solid tantalum (or 25 μF aluminum electrolytic) on the output swamps this effect and insures stability. Any increase of the load capacitance larger than 10 μF will merely improve the loop stability and output impedance.

LOAD REGULATION

The LM117 is capable of providing extremely good load regulation but a few precautions are needed to obtain maximum performance. The current set resistor connected between the adjustment terminal and the output terminal (usually 240Ω) should be tied directly to the output (case) of the regulator rather than near the load. This eliminates line drops from appearing effectively in series with the reference and degrading regulation. For example, a 15V regulator with 0.05Ω resistance between the regulator and load will have a load regulation due to line resistance of 0.05Ω × I_L. If the set resistor is connected near the load the effective line resistance will be 0.05Ω (1 + R2/R1) or in this case, 11.5 times worse.

Figure 2 shows the effect of resistance between the regulator and 240Ω set resistor.

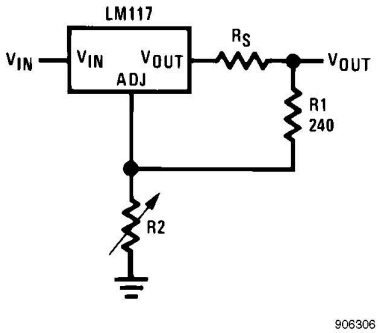

FIGURE 2. Regulator with Line Resistance in Output Lead

With the TO-3 package, it is easy to minimize the resistance from the case to the set resistor, by using two separate leads to the case. However, with the TO-39 package, care should be taken to minimize the wire length of the output lead. The ground of R2 can be returned near the ground of the load to provide remote ground sensing and improve load regulation.

PROTECTION DIODES

When external capacitors are used with any IC regulator it is sometimes necessary to add protection diodes to prevent the capacitors from discharging through low current points into the regulator. Most 10 μF capacitors have low enough internal series resistance to deliver 20A spikes when shorted. Although the surge is short, there is enough energy to damage parts of the IC.

When an output capacitor is connected to a regulator and the input is shorted, the output capacitor will discharge into the output of the regulator. The discharge current depends on the value of the capacitor, the output voltage of the regulator, and the rate of decrease of V_{IN}. In the LM117, this discharge path is through a large junction that is able to sustain 15A surge with no problem. This is not true of other types of positive regulators. For output capacitors of 25 μF or less, there is no need to use diodes.

The bypass capacitor on the adjustment terminal can discharge through a low current junction. Discharge occurs when *either* the input, or the output, is shorted. Internal to the LM117 is a 50Ω resistor which limits the peak discharge current. No protection is needed for output voltages of 25V or less and 10 μF capacitance. *Figure 3* shows an LM117 with protection

Application Hints

In operation, the LM117 develops a nominal 1.25V reference voltage, V_{REF}, between the output and adjustment terminal. The reference voltage is impressed across program resistor R1 and, since the voltage is constant, a constant current I_1 then flows through the output set resistor R2, giving an output voltage of

$$V_{OUT} = V_{REF}\left(1 + \frac{R2}{R1}\right) + I_{ADJ}R2 \quad (1)$$

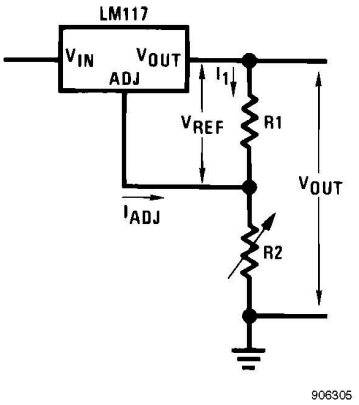

FIGURE 1.

Since the 100μA current from the adjustment terminal represents an error term, the LM117 was designed to minimize I_{ADJ} and make it very constant with line and load changes. To do this, all quiescent operating current is returned to the output establishing a minimum load current requirement. If there is insufficient load on the output, the output will rise.

EXTERNAL CAPACITORS

An input bypass capacitor is recommended. A 0.1μF disc or 1μF solid tantalum on the input is suitable input bypassing for almost all applications. The device is more sensitive to the absence of input bypassing when adjustment or output capacitors are used but the above values will eliminate the possibility of problems.

The adjustment terminal can be bypassed to ground on the LM117 to improve ripple rejection. This bypass capacitor prevents ripple from being amplified as the output voltage is increased. With a 10 μF bypass capacitor 80dB ripple rejection is obtainable at any output level. Increases over 10 μF do not appreciably improve the ripple rejection at frequencies above 120Hz. If the bypass capacitor is used, it is sometimes necessary to include protection diodes to prevent the capacitor from discharging through internal low current paths and damaging the device.

In general, the best type of capacitors to use is solid tantalum. Solid tantalum capacitors have low impedance even at high frequencies. Depending upon capacitor construction, it takes about 25 μF in aluminum electrolytic to equal 1μF solid tantalum at high frequencies. Ceramic capacitors are also good at high frequencies; but some types have a large decrease in capacitance at frequencies around 0.5 MHz. For this reason, 0.01 μF disc may seem to work better than a 0.1 μF disc as a bypass.

Although the LM117 is stable with no output capacitors, like any feedback circuit, certain values of external capacitance can cause excessive ringing. This occurs with values between 500 pF and 5000 pF. A 1 μF solid tantalum (or 25 μF aluminum electrolytic) on the output swamps this effect and insures stability. Any increase of the load capacitance larger than 10 μF will merely improve the loop stability and output impedance.

LOAD REGULATION

The LM117 is capable of providing extremely good load regulation but a few precautions are needed to obtain maximum performance. The current set resistor connected between the adjustment terminal and the output terminal (usually 240Ω) should be tied directly to the output (case) of the regulator rather than near the load. This eliminates line drops from appearing effectively in series with the reference and degrading regulation. For example, a 15V regulator with 0.05Ω resistance between the regulator and load will have a load regulation due to line resistance of 0.05Ω × I_L. If the set resistor is connected near the load the effective line resistance will be 0.05Ω (1 + R2/R1) or in this case, 11.5 times worse.

Figure 2 shows the effect of resistance between the regulator and 240Ω set resistor.

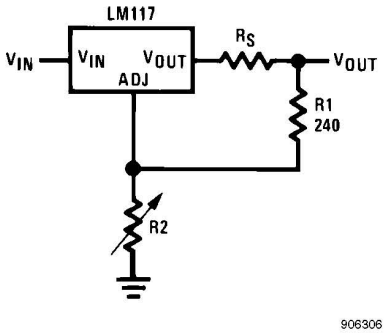

FIGURE 2. Regulator with Line Resistance in Output Lead

With the TO-3 package, it is easy to minimize the resistance from the case to the set resistor, by using two separate leads to the case. However, with the TO-39 package, care should be taken to minimize the wire length of the output lead. The ground of R2 can be returned near the ground of the load to provide remote ground sensing and improve load regulation.

PROTECTION DIODES

When external capacitors are used with any IC regulator it is sometimes necessary to add protection diodes to prevent the capacitors from discharging through low current points into the regulator. Most 10 μF capacitors have low enough internal series resistance to deliver 20A spikes when shorted. Although the surge is short, there is enough energy to damage parts of the IC.

When an output capacitor is connected to a regulator and the input is shorted, the output capacitor will discharge into the output of the regulator. The discharge current depends on the value of the capacitor, the output voltage of the regulator, and the rate of decrease of V_{IN}. In the LM117, this discharge path is through a large junction that is able to sustain 15A surge with no problem. This is not true of other types of positive regulators. For output capacitors of 25 μF or less, there is no need to use diodes.

The bypass capacitor on the adjustment terminal can discharge through a low current junction. Discharge occurs when *either* the input, or the output, is shorted. Internal to the LM117 is a 50Ω resistor which limits the peak discharge current. No protection is needed for output voltages of 25V or less and 10 μF capacitance. *Figure 3* shows an LM117 with protection

diodes included for use with outputs greater than 25V and high values of output capacitance.

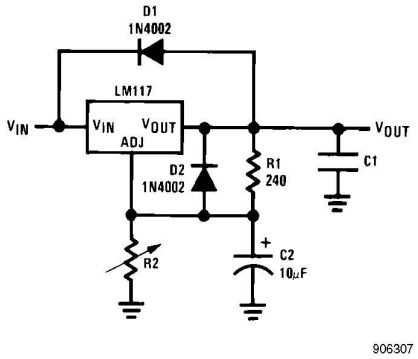

$$V_{OUT} = 1.25V\left(1 + \frac{R2}{R1}\right) + I_{ADJ}R2 \quad (2)$$

D1 protects against C1

D2 protects against C2

FIGURE 3. Regulator with Protection Diodes

HEATSINK REQUIREMENTS

The LM317 regulators have internal thermal shutdown to protect the device from over-heating. Under all operating conditions, the junction temperature of the LM317 should not exceed the rated maximum junction temperature (T_J) of 150° C for the LM117, or 125°C for the LM317A and LM317. A heatsink may be required depending on the maximum device power dissipation and the maximum ambient temperature of the application. To determine if a heatsink is needed, the power dissipated by the regulator, P_D, must be calculated:

$$P_D = ((V_{IN} - V_{OUT}) \times I_L) + (V_{IN} \times I_G) \quad (3)$$

Figure 4 shows the voltage and currents which are present in the circuit.

The next parameter which must be calculated is the maximum allowable temperature rise, $T_{R(MAX)}$:

$$T_{R(MAX)} = T_{J(MAX)} - T_{A(MAX)} \quad (4)$$

where $T_{J(MAX)}$ is the maximum allowable junction temperature (150°C for the LM117, or 125°C for the LM317A/LM317), and $T_{A(MAX)}$ is the maximum ambient temperature which will be encountered in the application.

Using the calculated values for $T_{R(MAX)}$ and P_D, the maximum allowable value for the junction-to-ambient thermal resistance (θ_{JA}) can be calculated:

$$\theta_{JA} = (T_{R(MAX)} / P_D) \quad (5)$$

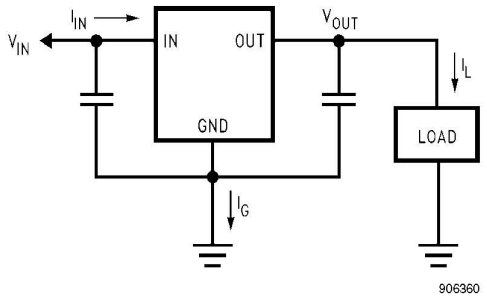

FIGURE 4. Power Dissipation Diagram

If the calculated maximum allowable thermal resistance is higher than the actual package rating, then no additional work is needed. If the calculated maximum allowable thermal resistance is lower than the actual package rating either the power dissipation (P_D) needs to be reduced, the maximum ambient temperature $T_{A(MAX)}$ needs to be reduced, the thermal resistance (θ_{JA}) must be lowered by adding a heatsink, or some combination of these.

If a heatsink is needed, the value can be calculated from the formula:

$$\theta_{HA} \leq (\theta_{JA} - (\theta_{CH} + \theta_{JC})) \quad (6)$$

where (θ_{CH} is the thermal resistance of the contact area between the device case and the heatsink surface, and θ_{JC} is thermal resistance from the junction of the die to surface of the package case.

When a value for $\theta_{(H-A)}$ is found using the equation shown, a heatsink must be selected that has a value that is less than, or equal to, this number.

The $\theta_{(H-A)}$ rating is specified numerically by the heatsink manufacturer in the catalog, or shown in a curve that plots temperature rise vs power dissipation for the heatsink.

HEATSINKING SURFACE MOUNT PACKAGES

The TO-263 (S), SOT-223 (EMP) and TO-252 (MDT) packages use a copper plane on the PCB and the PCB itself as a heatsink. To optimize the heat sinking ability of the plane and PCB, solder the tab of the package to the plane.

HEATSINKING THE SOT-223 PACKAGE

Figure 5 and *Figure 6* show the information for the SOT-223 package. *Figure 6* assumes a $\theta_{(J-A)}$ of 74°C/W for 1 ounce copper and 51°C/W for 2 ounce copper and a maximum junction temperature of 125°C. Please see AN-1028 for thermal enhancement techniques to be used with SOT-223 and TO-252 packages.

TIP132
TIP135 TIP137

COMPLEMENTARY SILICON POWER DARLINGTON TRANSISTORS

- STMicroelectronics PREFERRED SALESTYPES

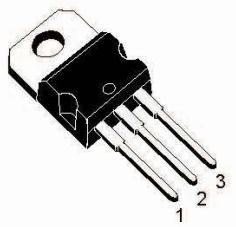

TO-220

APPLICATION

- LINEAR AND SWITCHING INDUSTRIAL EQUIPMENT

DESCRIPTION

The TIP132 is a silicon Epitaxial-Base NPN power transistor in monolithic Darlington configuration, mounted in Jedec TO-220 plastic package. It is intented for use in power linear and switching applications.

The complementary PNP type is TIP137 .

Also TIP135 is a PNP type.

INTERNAL SCHEMATIC DIAGRAM

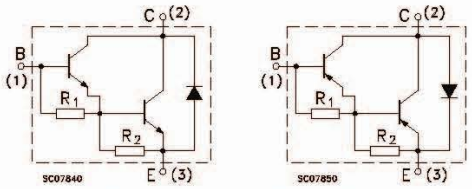

R_1 Typ. = 5 KΩ R_2 Typ. = 150 Ω

ABSOLUTE MAXIMUM RATINGS

Symbol	Parameter		Value		Unit
		NPN		TIP132	
		PNP	TIP135	TIP137	
V_{CBO}	Collector-Base Voltage (I_E = 0)		60	100	V
V_{CEO}	Collector-Emitter Voltage (I_B = 0)		60	100	V
V_{EBO}	Emitter-Base Voltage (I_C = 0)		5		V
I_C	Collector Current		8		A
I_{CM}	Collector Peak Current		12		A
I_B	Base Current		0.3		A
P_{tot}	Total Dissipation at $T_{case} \leq 25\ ^oC$ $T_{amb} \leq 25\ ^oC$		70 2		W W
T_{stg}	Storage Temperature		-65 to 150		^oC
T_j	Max. Operating Junction Temperature		150		^oC

* For PNP types voltage and current values are negative.

THERMAL DATA

$R_{thj-case}$	Thermal Resistance Junction-case	Max	1.78	°C/W
$R_{thj-amb}$	Thermal Resistance Junction-ambient	Max	63.5	°C/W

ELECTRICAL CHARACTERISTICS (T_{case} = 25 °C unless otherwise specified)

Symbol	Parameter	Test Conditions		Min.	Typ.	Max.	Unit
I_{CEO}	Collector Cut-off Current (I_B = 0)	V_{CE} = Half Rated V_{CEO}				0.5	mA
I_{CBO}	Collector Cut-off Current (I_E = 0)	V_{CB} = Rated V_{CBO}				0.2	mA
I_{EBO}	Emitter Cut-off Current (I_C = 0)	V_{EB} = 5 V				5	mA
$V_{CEO(sus)}$*	Collector-Emitter Sustaining Voltage (I_B = 0)	I_C = 30 mA for **TIP135** for **TIP132/TIP137**		 60 100			 V V
$V_{CE(sat)}$*	Collector-Emitter Saturation Voltage	I_C = 4 A I_C = 6 A	I_B = 16 mA I_B = 30 mA			2 4	V V
V_{BE}*	Base-Emitter Voltage	I_C = 4 A	V_{CE} = 4 V			2.5	V
h_{FE}*	DC Current Gain	I_C = 1 A I_C = 4 A	V_{CE} = 4 V V_{CE} = 4 V	500 1000		 15000	

∗ Pulsed: Pulse duration = 300 µs, duty cycle 1.5 %
For PNP types voltage and current values are negative.

Safe Operating Areas

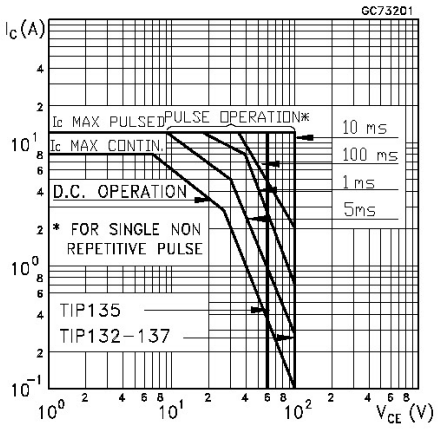

Power Derating Curve

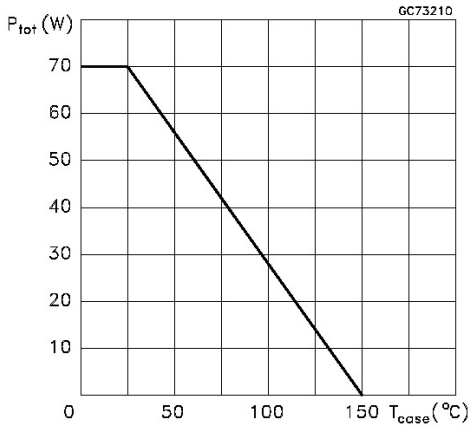

NPN general purpose transistors BC546; BC547

FEATURES

- Low current (max. 100 mA)
- Low voltage (max. 65 V).

APPLICATIONS

- General purpose switching and amplification.

DESCRIPTION

NPN transistor in a TO-92; SOT54 plastic package.
PNP complements: BC556 and BC557.

PINNING

PIN	DESCRIPTION
1	emitter
2	base
3	collector

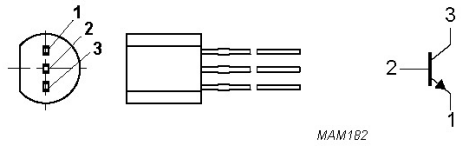

Fig.1 Simplified outline (TO-92; SOT54) and symbol.

LIMITING VALUES

In accordance with the Absolute Maximum Rating System (IEC 134).

SYMBOL	PARAMETER	CONDITIONS	MIN.	MAX.	UNIT
V_{CBO}	collector-base voltage	open emitter			
	BC546		–	80	V
	BC547		–	50	V
V_{CEO}	collector-emitter voltage	open base			
	BC546		–	65	V
	BC547		–	45	V
V_{EBO}	emitter-base voltage	open collector			
	BC546		–	6	V
	BC547		–	6	V
I_C	collector current (DC)		–	100	mA
I_{CM}	peak collector current		–	200	mA
I_{BM}	peak base current		–	200	mA
P_{tot}	total power dissipation	$T_{amb} \leq 25$ °C; note 1	–	500	mW
T_{stg}	storage temperature		–65	+150	°C
T_j	junction temperature		–	150	°C
T_{amb}	operating ambient temperature		–65	+150	°C

Note

1. Transistor mounted on an FR4 printed-circuit board.

THERMAL CHARACTERISTICS

SYMBOL	PARAMETER	CONDITIONS	VALUE	UNIT
$R_{th\ j\text{-}a}$	thermal resistance from junction to ambient	note 1	0.25	K/mW

Note

1. Transistor mounted on an FR4 printed-circuit board.

CHARACTERISTICS

T_j = 25 °C unless otherwise specified.

SYMBOL	PARAMETER	CONDITIONS	MIN.	TYP.	MAX.	UNIT
I_{CBO}	collector cut-off current	I_E = 0; V_{CB} = 30 V	–	–	15	nA
		I_E = 0; V_{CB} = 30 V; T_j = 150 °C	–	–	5	μA
I_{EBO}	emitter cut-off current	I_C = 0; V_{EB} = 5 V	–	–	100	nA
h_{FE}	DC current gain	I_C = 10 μA; V_{CE} = 5 V; see Figs 2, 3 and 4				
	BC546A		–	90	–	
	BC546B; BC547B		–	150	–	
	BC547C		–	270	–	
	DC current gain	I_C = 2 mA; V_{CE} = 5 V; see Figs 2, 3 and 4				
	BC546A		110	180	220	
	BC546B; BC547B		200	290	450	
	BC547C		420	520	800	
	BC547		110	–	800	
	BC546		110	–	450	
V_{CEsat}	collector-emitter saturation voltage	I_C = 10 mA; I_B = 0.5 mA	–	90	250	mV
		I_C = 100 mA; I_B = 5 mA	–	200	600	mV
V_{BEsat}	base-emitter saturation voltage	I_C = 10 mA; I_B = 0.5 mA; note 1	–	700	–	mV
		I_C = 100 mA; I_B = 5 mA; note 1	–	900	–	mV
V_{BE}	base-emitter voltage	I_C = 2 mA; V_{CE} = 5 V; note 2	580	660	700	mV
		I_C = 10 mA; V_{CE} = 5 V	–	–	770	mV
C_c	collector capacitance	I_E = i_e = 0; V_{CB} = 10 V; f = 1 MHz	–	1.5	–	pF
C_e	emitter capacitance	I_C = i_c = 0; V_{EB} = 0.5 V; f = 1 MHz	–	11	–	pF
f_T	transition frequency	I_C = 10mA; V_{CE} = 5 V; f = 100 MHz	100	–	–	MHz
F	noise figure	I_C = 200 μA; V_{CE} = 5 V; R_S = 2 kΩ; f = 1 kHz; B = 200 Hz	–	2	10	dB

Notes

1. V_{BEsat} decreases by about 1.7 mV/K with increasing temperature.
2. V_{BE} decreases by about 2 mV/K with increasing temperature.

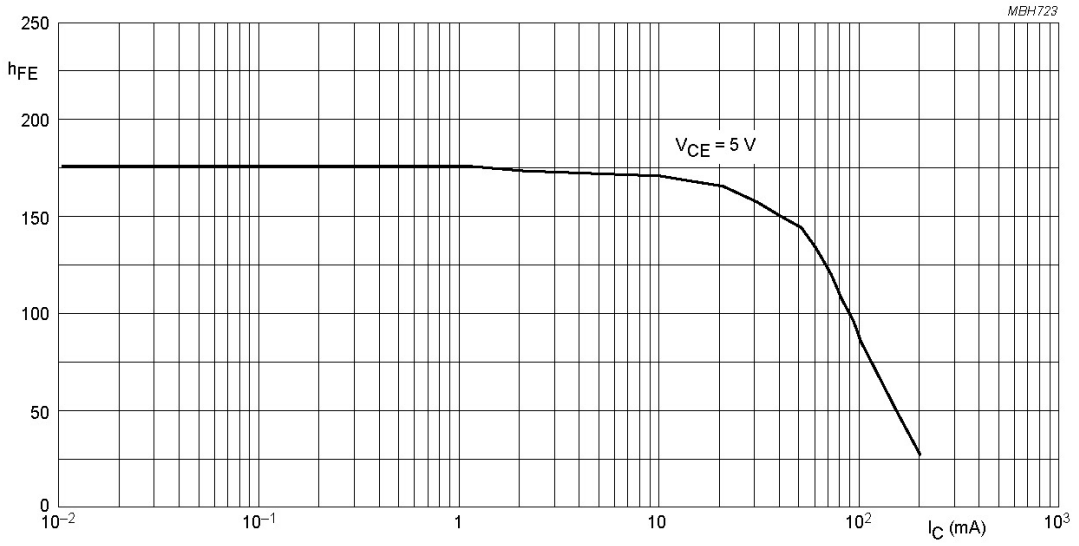

BC546A.

Fig.2 DC current gain; typical values.

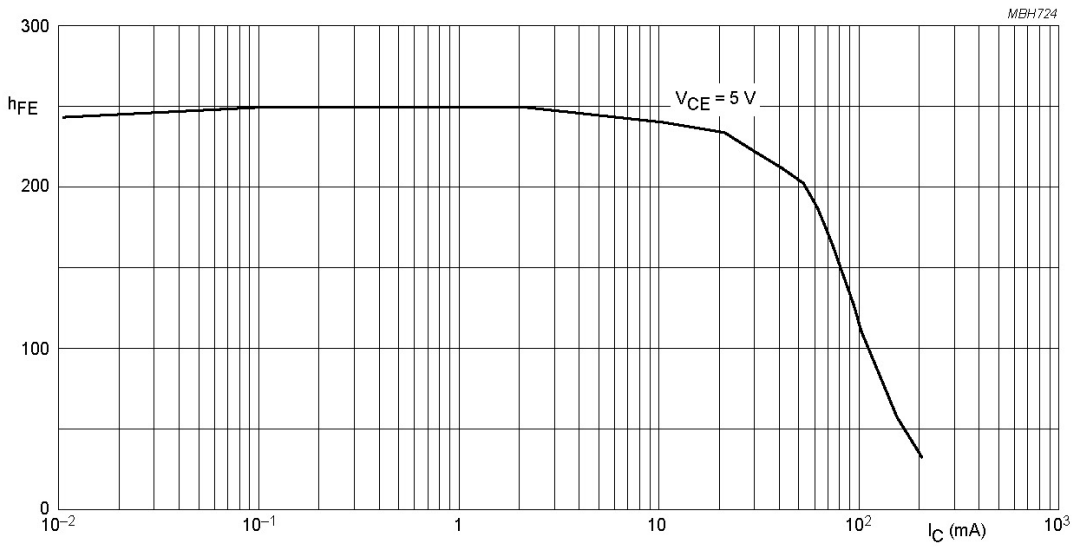

BC546B; BC547B.

Fig.3 DC current gain; typical values.

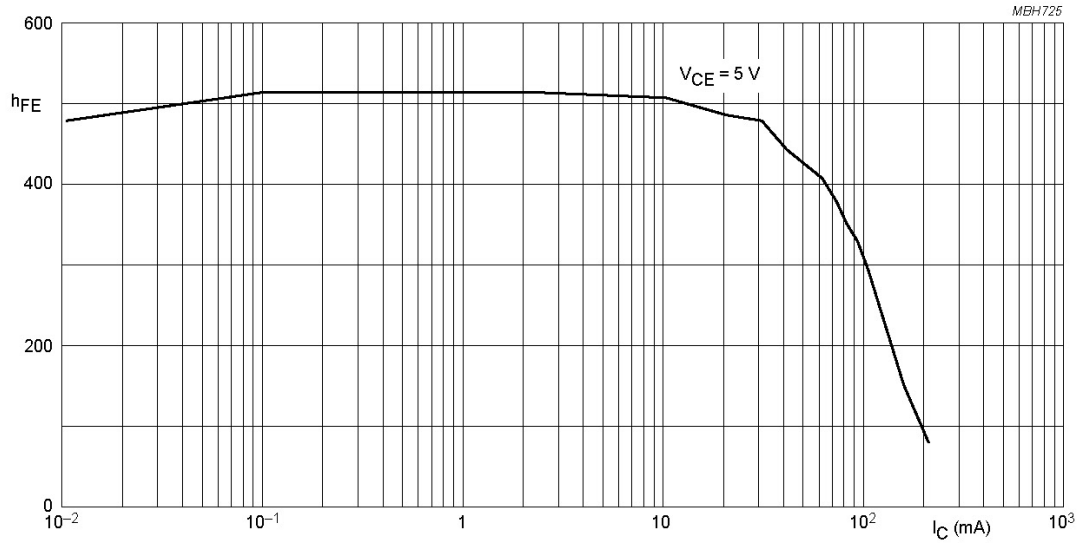

BC547C.

Fig.4 DC current gain; typical values.

TL074
TL074A - TL074B

LOW NOISE J-FET QUAD OPERATIONAL AMPLIFIERS

- WIDE COMMON-MODE (UP TO V_{CC}^+) AND DIFFERENTIAL VOLTAGE RANGE
- LOW INPUT BIAS AND OFFSET CURRENT
- LOW NOISE e_n = 15nV/√Hz (typ)
- OUTPUT SHORT-CIRCUIT PROTECTION
- HIGH INPUT IMPEDANCE J–FET INPUT STAGE
- LOW HARMONIC DISTORTION : 0.01% (typ)
- INTERNAL FREQUENCY COMPENSATION
- LATCH UP FREE OPERATION
- HIGH SLEW RATE : 13V/µs (typ)

N
DIP14
(Plastic Package)

D
SO14
(Plastic Micropackage)

DESCRIPTION

The TL074, TL074A and TL074B are high speed J–FET input quad operational amplifiers incorporating well matched, high voltage J–FET and bipolar transistors in a monolithic integrated circuit.

The devices feature high slew rates, low input bias and offset currents, and low offset voltage temperature coefficient.

ORDER CODE

Part Number	Temperature Range	Package	
		N	D
TL074M/AM/BM	-55°C, +125°C	•	•
TL074I/AI/BI	-40°C, +105°C	•	•
TL074C/AC/BC	0°C, +70°C	•	•
Example : TL074IN			

N = Dual in Line Package (DIP)
D = Small Outline Package (SO) - also available in Tape & Reel (DT)

PIN CONNECTIONS (top view)

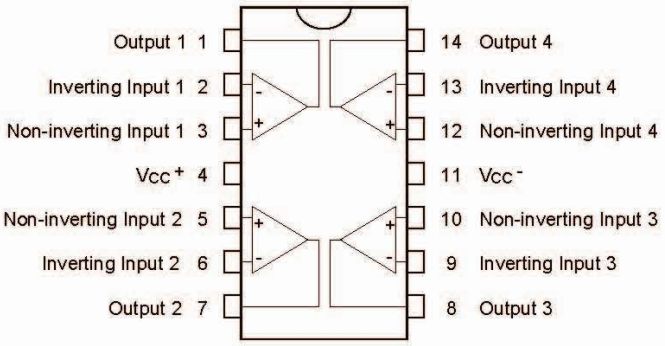

SCHEMATIC DIAGRAM

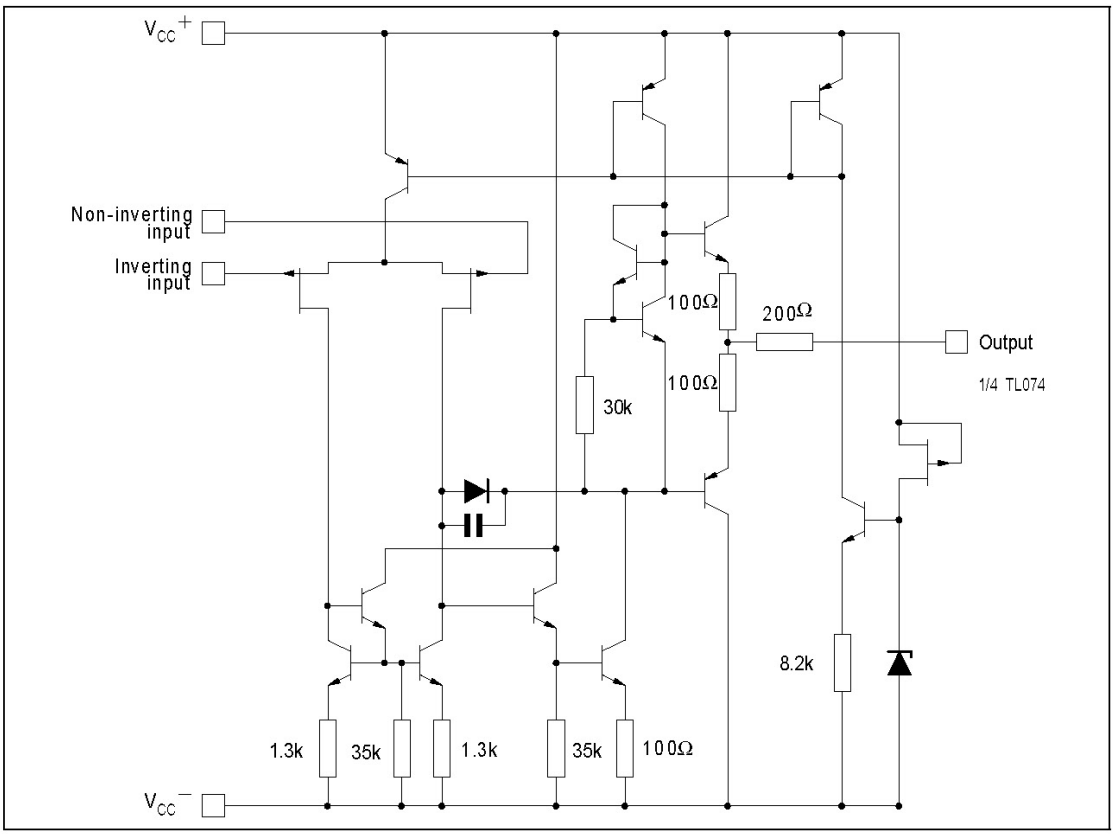

ABSOLUTE MAXIMUM RATINGS

Symbol	Parameter	TL074M, AM, BM	TL074I, AI, BI	TL074C, AC, BC	Unit
V_{CC}	Supply voltage - note 1)	±18			V
V_i	Input Voltage - note 2)	±15			V
V_{id}	Differential Input Voltage - note 3)	±30			V
P_{tot}	Power Dissipation	680			mW
	Output Short-circuit Duration - note 4)	Infinite			
T_{oper}	Operating Free-air Temperature Range	-55 to +125	-40 to +105	0 to +70	°C
T_{stg}	Storage Temperature Range	-65 to +150			°C

1. All voltage values, except differential voltage, are with respect to the zero reference level (ground) of the supply voltages where the zero reference level is the midpoint between V_{CC}^+ and V_{CC}^-.
2. The magnitude of the input voltage must never exceed the magnitude of the supply voltage or 15 volts, whichever is less.
3. Differential voltages are the non-inverting input terminal with respect to the inverting input terminal.
4. The output may be shorted to ground or to either supply. Temperature and/or supply voltages must be limited to ensure that the dissipation rating is not exceeded

ELECTRICAL CHARACTERISTICS

V_{CC} = ±15V, T_{amb} = +25°C (unless otherwise specified)

Symbol	Parameter		TL074I,M,AC,AI,AM, BC,BI,BM			TL074C			Unit
			Min.	Typ.	Max.	Min.	Typ.	Max.	
V_{io}	Input Offset Voltage (R_s = 50Ω)								mV
	T_{amb} = +25°C	TL074		3	10		3	10	
		TL074A		3	6				
		TL074B		1	3				
	$T_{min} \le T_{amb} \le T_{max}$	TL074			13			13	
		TL074A			7				
		TL074B			5				
DV_{io}	Input Offset Voltage Drift			10			10		µV/°C
I_{io}	Input Offset Current - note 1)								
	T_{amb} = +25°C			5	100		5	100	pA
	$T_{min} \le T_{amb} \le T_{max}$				4			10	nA
I_{ib}	Input Bias Current -note 1								
	T_{amb} = +25°C			20	200		30	200	pA
	$T_{min} \le T_{amb} \le T_{max}$				20			20	nA
A_{vd}	Large Signal Voltage Gain (R_L = 2kΩ, V_o = ±10V)								V/mV
	T_{amb} = +25°C		50	200		25	200		
	$T_{min} \le T_{amb} \le T_{max}$		25			15			
SVR	Supply Voltage Rejection Ratio (R_S = 50Ω)								dB
	T_{amb} = +25°C		80	86		70	86		
	$T_{min} \le T_{amb} \le T_{max}$		80			70			
I_{CC}	Supply Current, no load, per amplifier								mA
	T_{amb} = +25°C			1.4	2.5		1.4	2.5	
	$T_{min} \le T_{amb} \le T_{max}$				2.5			2.5	
V_{icm}	Input Common Mode Voltage Range		±11	+15		±11	+15		V
				-12			-12		
CMR	Common Mode Rejection Ratio (R_S = 50Ω)								dB
	T_{amb} = +25°C		80	86		70	86		
	$T_{min} \le T_{amb} \le T_{max}$		80			70			
I_{os}	Output Short-circuit Current								mA
	T_{amb} = +25°C		10	40	60	10	40	60	
	$T_{min} \le T_{amb} \le T_{max}$		10		60	10		60	
$\pm V_{opp}$	Output Voltage Swing								V
	T_{amb} = +25°C	RL = 2kΩ	10	12		10	12		
		RL = 10kΩ	12	13.5		12	13.5		
	$T_{min} \le T_{amb} \le T_{max}$	RL = 2kΩ	10			10			
		RL = 10kΩ	12			12			
SR	Slew Rate (T_{amb} = +25°C)								V/µs
	V_{in} = 10V, R_L = 2kΩ, C_L = 100pF, unity gain		8	13		8	13		
t_r	Rise Time (T_{amb} = +25°C)								µs
	V_{in} = 20mV, R_L = 2kΩ, C_L = 100pF, unity gain			0.1			0.1		
K_{ov}	Overshoot (T_{amb} = +25°C)								%
	V_{in} = 20mV, R_L = 2kΩ, C_L = 100pF, unity gain			10			10		
GBP	Gain Bandwidth Product (T_{amb} = +25°C)								MHz
	V_{in} = 10mV, R_L = 2kΩ, C_L = 100pF, f= 100kHz		2	3		2	3		
R_i	Input Resistance			10^{12}			10^{12}		Ω

Symbol	Parameter	TL074I,M,AC,AI,AM, BC,BI,BM			TL074C			Unit
		Min.	Typ.	Max.	Min.	Typ.	Max.	
THD	Total Harmonic Distortion (T_{amb} = +25°C) f= 1kHz, R_L = 2kΩ,C_L = 100pF, A_v = 20dB, V_o = $2V_{pp}$		0.01			0.01		%
e_n	Equivalent Input Noise Voltage R_S = 100Ω, f = 1KHz		15			15		$\frac{nV}{\sqrt{Hz}}$
∅m	Phase Margin		45			45		degrees
V_{o1}/V_{o2}	Channel separation A_v = 100		120			120		dB

1. The input bias currents are junction leakage currents which approximately double for every 10°C increase in the junction temperature.

Datenblatt LCD

PeakTech®

LDP-340 LCD
3½-stellig

- Breiter Anwendungsbereich, z. B.Volt-/Amperemeter-, Thermometer, PH-Wert-, dB-Wert-, Watt-, Kapazitäts-, Lux- und LCR-Meßgeräte
- 200 mV Eingangsempfindlichkeit
- mit Hintergrundbeleuchtung
- problemloser Einbau durch einfache Klippmontage
- keine galvanische Trennung
- Betriebsspannung: 9 V für LCD- und 7-12 V für LED-Module
- veränderbare Kommastelle
- Meßprinzip: Doppelflanken-A/D-Umwandler

max. Eingangspannung	199,9 mV DC
max. Anzeige	1999 (3½-stellig), mit automatischer Polaritätsanzeige
Ziffernhöhe	8 mm
Meßfolge	2...3 x pro Sekunde
Genauigkeit	± 0.5 % (bei 23° C ± 5° C bei RH von < 80 % / bei 23° C ± 5°
Eingangswiderstand	> 100 MΩ
Überbereichsanz.	"1" erscheint im Anzeigefeld
Verlustleistung	1 mA DC
Dezimalstelle	mit Kurzschlußstecker wählbar
Überspannungsschutz	600 V DC/ AC eff
Abmessungen	47 x 20 x 16 mm
Frontplattenaussschnitt (B x H)	43 x 19 mm

Frontplatte
(1:1)

Die Grössenangaben
sind innen „gemessen“

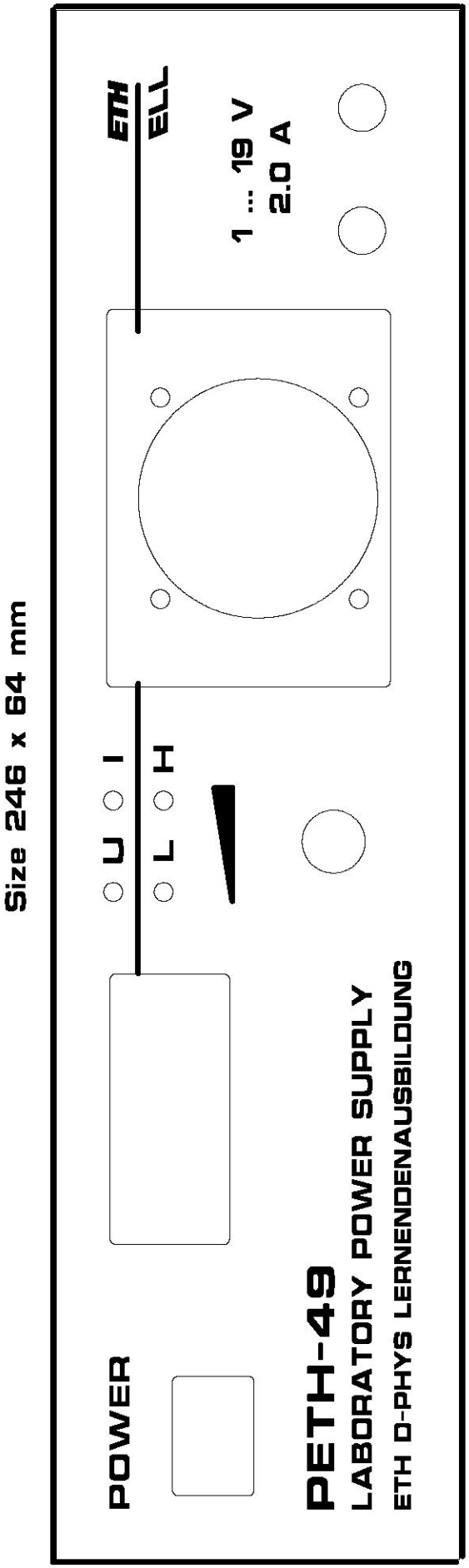

Rückwand
(1:1)

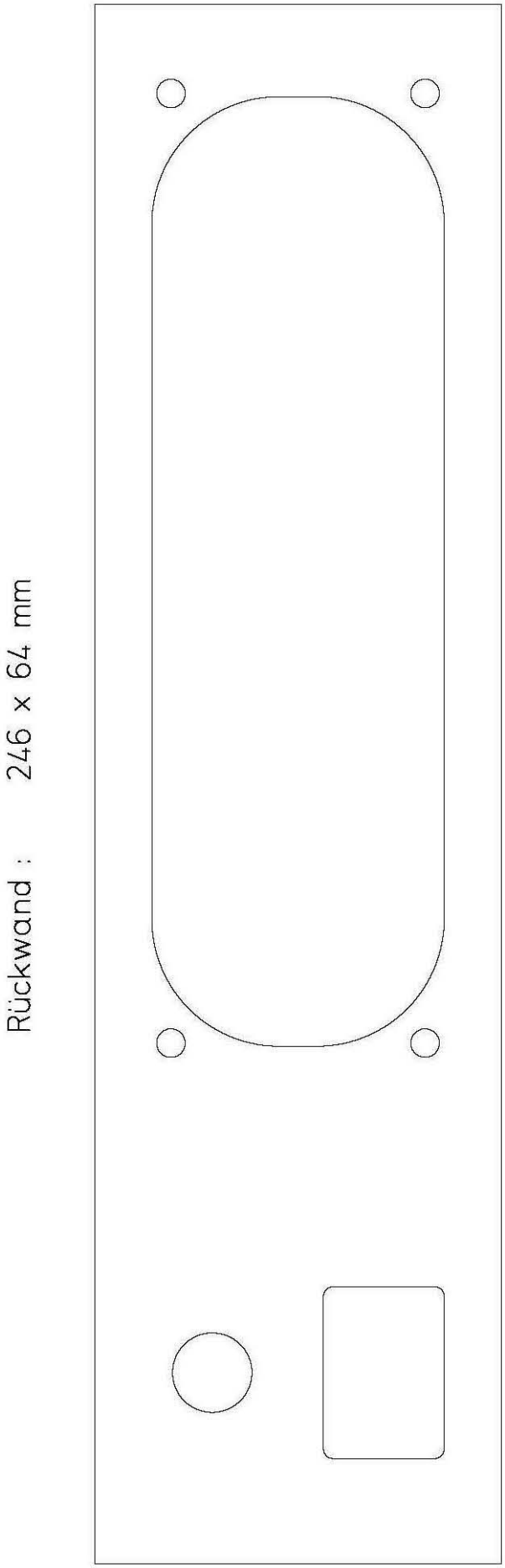

Bodenplatte
(1:1)

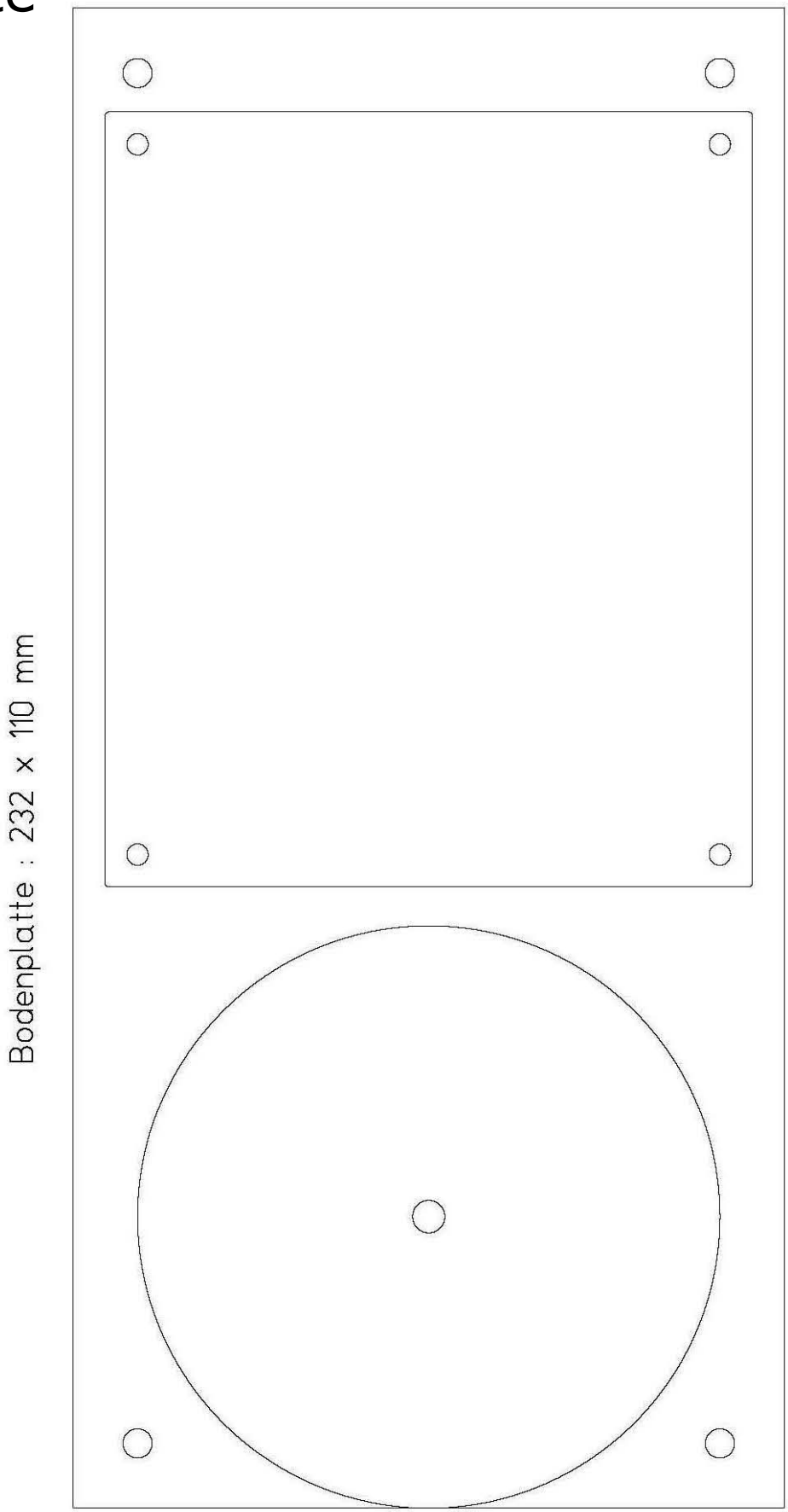

Skala

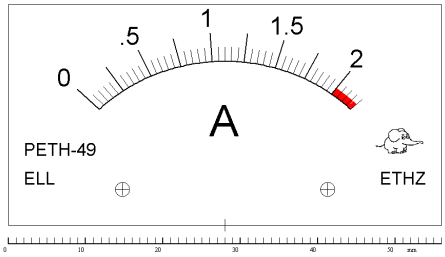
0
.5
1
1.5
2
A
PETH-49
ELL
ETHZ

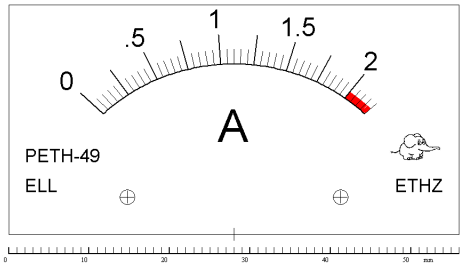
0
.5
1
1.5
2
A
PETH-49
ELL
ETHZ

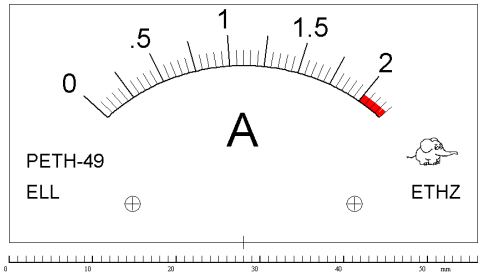
0
.5
1
1.5
2
A
PETH-49
ELL
ETHZ

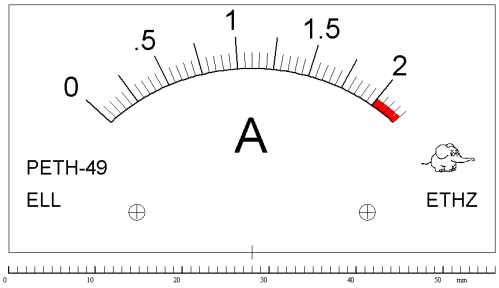
0
.5
1
1.5
2
A
PETH-49
ELL
ETHZ

DC/DC-Konverter

TMA Serie, 1 Watt

RoHS compliant

Merkmale

- SIL-Gehäuse
- Single- und Dual-Ausgang
- E/A-Isolation 1000 VDC
- Hoher Wirkungsgrad bis 81%
- Arbeitstemperaturbereich –40°C bis +85°C
- Industriestandard Pin-Out
- 100% Burn-in (8 Std.)
- Bleifreier Aufbau, RoHS-konform
- 3 Jahre Garantie

Die TMA-Serie sind ultrakleine, isolierte 1 W DC/DC-Konverter im SIL-Gehäuse. Aufgrund des kleinen Platzbedarfs von nur 1.2 cm² sind sie die ideale Lösung für eine Vielzahl platzkritische Anwendungen auf der Printkartenebene. Dank des Aufbaus in SMD-Technologie sind diese Konverter sehr zuverlässig und kostengünstig.

Modelle

Bestellnummer	Eingangsspannung	Ausgangsspannung	Ausgangsstrom max.	Wirkungsgrad typ.
TMA 0505S	5 VDC ± 10%	5 VDC	200 mA	71 %
TMA 0512S		12 VDC	80 mA	78 %
TMA 0515S		15 VDC	65 mA	78 %
TMA 0505D		± 5 VDC	±100 mA	72 %
TMA 0512D		±12 VDC	± 40 mA	78 %
TMA 0515D		±15 VDC	± 35 mA	79 %
TMA 1205S	12 VDC ± 10%	5 VDC	200 mA	73 %
TMA 1212S		12 VDC	80 mA	80 %
TMA 1215S		15 VDC	65 mA	80 %
TMA 1205D		± 5 VDC	±100 mA	74 %
TMA 1212D		±12 VDC	± 40 mA	81 %
TMA 1215D		±15 VDC	± 35 mA	81 %
TMA 1505S	15 VDC ± 10%	5 VDC	200 mA	73 %
TMA 1512S		12 VDC	80 mA	80 %
TMA 1515S		15 VDC	65 mA	80 %
TMA 1505D		± 5 VDC	±100 mA	74 %
TMA 1512D		±12 VDC	± 40 mA	81 %
TMA 1515D		±15 VDC	± 35 mA	81 %
TMA 2405S	24 VDC ± 10%	5 VDC	200 mA	71 %
TMA 2412S		12 VDC	80 mA	78 %
TMA 2415S		15 VDC	65 mA	79 %
TMA 2405D		± 5 VDC	±100 mA	72 %
TMA 2412D		±12 VDC	± 40 mA	79 %
TMA 2415D		±15 VDC	± 35 mA	80 %

Eingangsspezifikationen

Eingangsstrom bei Leerlauf / Vollast	5 Uein Modelle	30 mA / 260 mA typ.
	12 Uein Modelle	12 mA / 110 mA typ.
	15 Uein Modelle	12 mA / 100 mA typ.
	24 Uein Modelle	7 mA / 55 mA typ.
Transiente Überspannung (1 sec. max.)	5 Uein Modelle	9 V max.
	12 Uein Modelle	18 V max.
	15 Uein Modelle	21 V max.
	24 Uein Modelle	30 V max.
Verpolungsschutz		0.3 A max.
Reflektierter Ripplestrom		Reduzierung durch externen 1–3.3 µF Polyesterfilm-Kondensator
Eingangsfilter		interne Kondensatoren

Ausgangsspezifikationen

Einstellgenauigkeit der Ausgangsspannung		± 3 %
Spannungssymmetrie (Modelle mit Dualausgang)		± 1 % max.
Regelabweichungen	– Eingangsänderung	± 1.2 % / 1 % Änderung Uein
	– Laständerung 20 – 100 %	± 10 % max.
Restwelligkeit (20 MHz Bandbreite)		75 mV pk-pk max.
Temperaturkoeffizient		± 0.02 % / K
Kurzschlußschutz		1 sec. max.
Kapazitive Last	– Modelle mit Singleausgang	220 µF max.
	– Modelle mit Dualausgang	100 µF max.

Allgemeine Spezifikationen

Temperaturbereich	– Betrieb	–40°C ... +85°C
	– Gehäusetemperatur	+95°C max.
	– Lagerung	–40°C ... +105°C
Luftfeuchtigkeit (nicht betauend)		95 % rel H max.
Zuverlässigkeit, kalkulierte MTBF (MIL-HDBK-217E)		> 2 Mio. Std. bei +25°C
Isolationsspannung	Eingang/Ausgang	1000 VDC
Isolationskapazität	Eingang/Ausgang	60 pF typ.
Isolationswiderstand	Eingang/Ausgang	> 1000 MΩ
Schaltfrequenz		100 kHz typ. (Pulsfrequenzmodulation)
Frequenzänderung über den gesamten Regelbereich		± 30 % max.

Alle Spezifikationen bei Nominal-Eingangsspannung, Vollast und +25°C nach Aufwärmzeit, ausgenommen anders spezifiziert.

Physikalische Spezifikationen

Gehäusematerial		Kunststoff (UL 94-V-0 Klasse)
Gewicht	Modelle mit Singleausgang: Modelle mit Dualausgang:	2.1 g 2.6 g
Löttemperatur		max. 265°C / 10 sec.

Gehäuseabmessungen mm (inches)

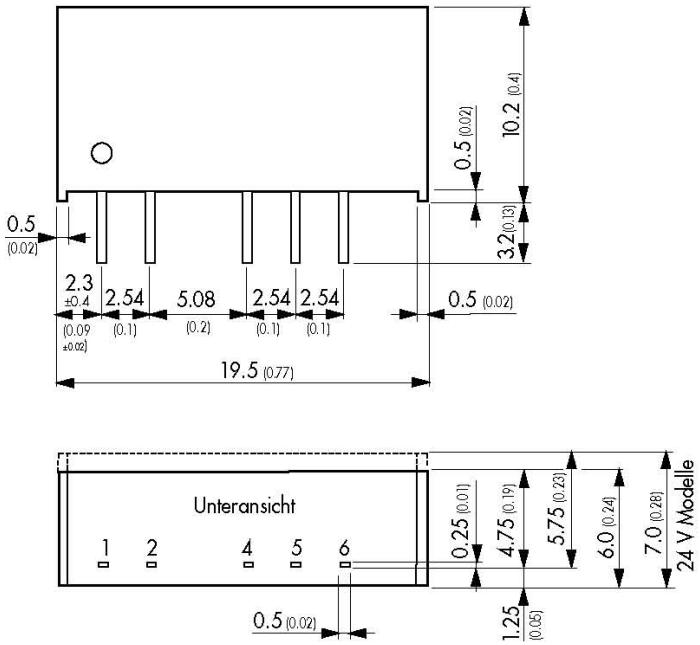

Pin-Out		
Pin	**Single**	**Dual**
1	+Uein (Vcc)	+Uein (Vcc)
2	–Uein (GND)	–Uein (GND)
4	–Uaus	–Uaus
5	Kein Pin	Common
6	+Uaus	+Uaus

Toleranz: ±0.25 (0.01)
Pins: ±0.05 (0.002)

Technische Änderungen vorbehalten.

TRACO ELECTRONIC AG
Jenatschstrasse 1 · CH-8002 Zürich
Tel. +41 43311 4511 · Fax +41 43311 4545 · info@traco.ch · www.tracopower.com