Document Number: MPL115A2
Rev. 9, 02/2013

RoHS

Miniature I²C Digital Barometer

The MPL115A2 is an absolute pressure sensor with a digital I²C output targeting low cost applications. A miniature 5 x 3 x 1.2 mm LGA package is ideally suited for the space constrained requirements of portable electronic devices. Low current consumptions of 5 µA during Active mode and 1 µA during Shutdown (Sleep) mode are essential when focusing on low-power applications. The wide operating temperature range spans from -40°C to +105°C to fit demanding environmental conditions.

The MPL115A2 employs a MEMS pressure sensor with a conditioning IC to provide accurate pressure measurements from 50 to 115 kPa. An integrated ADC converts pressure and temperature sensor readings to digitized outputs via a I²C port. Factory calibration data is stored internally in an on-board ROM. Utilizing the raw sensor output and calibration data, the host microcontroller executes a compensation algorithm to render *Compensated Absolute Pressure* with ±1 kPa accuracy.

The MPL115A2 pressure sensor's small form factor, low power capability, precision, and digital output optimize it for barometric measurement applications.

MPL115A2
50 to 115 kPa

MPL115A2
5.0 mm x 3.0 mm x 1.2 mm

Top View

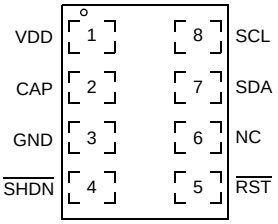

Pin Connections

Features

- Digitized pressure and temperature information together with programmed calibration coefficients for host micro use.
- Factory calibrated
- 50 kPa to 115 kPa absolute pressure
- ±1 kPa accuracy
- 2.375V to 5.5V supply
- Integrated ADC
- I²C Interface (operates up to 400 kHz)
- 7-bit I²C address = 0x60
- Monotonic pressure and temperature data outputs
- Surface mount RoHS compliant package

Application Examples

- Barometry (portable and desktop)
- Altimeters
- Weather stations
- Hard-disk drives (HDD)
- Industrial equipment
- Health monitoring
- Air control systems

ORDERING INFORMATION									
Device Name	Package Options	Case No.	# of Ports			Pressure Type			Digital Interface
			None	Single	Dual	Gauge	Differential	Absolute	
MPL115A2	Tray	2015	•					•	I²C
MPL115A2T1	Tape & Reel (1000)	2015	•					•	I²C

© 2009-2013 Freescale Semiconductor, Inc. All rights reserved.

1 Block Diagram and Pin Descriptions

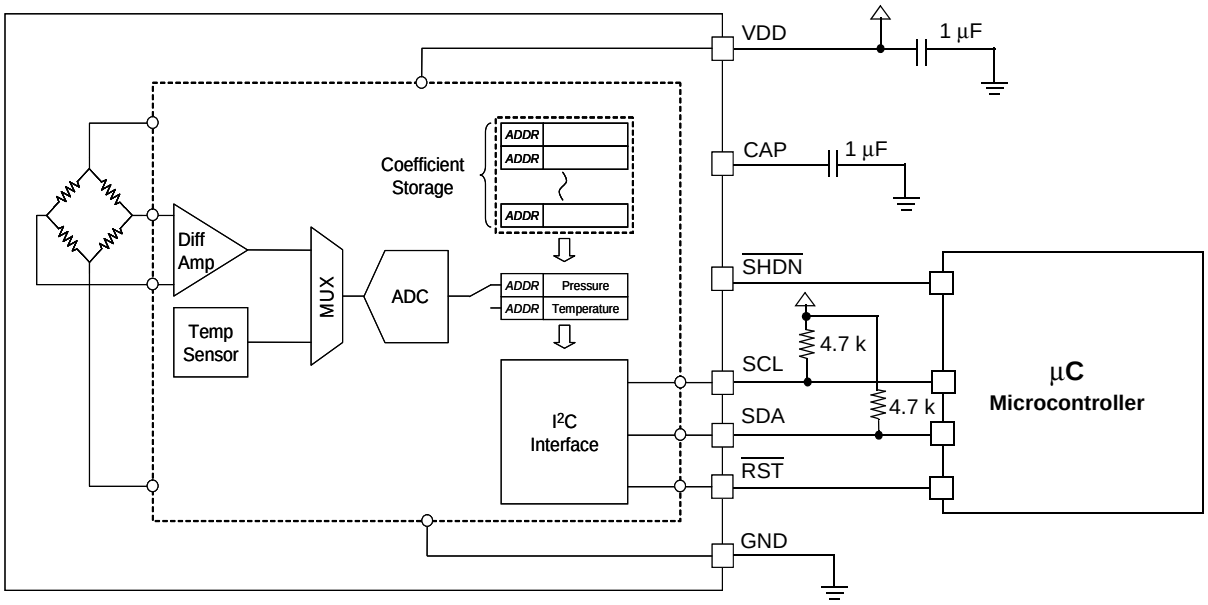

Figure 1. Block Diagram and Pin Connections

Table 1. Pin Description

Pin	Name	Function
1	VDD	VDD Power Supply Connection: VDD range is 2.375V to 5.5V.
2	CAP	1 µF connected to ground.
3	GND	Ground
4	$\overline{\text{SHDN}}$	Shutdown: Connect to GND to disable the device. When in shutdown, the part draws no more than 1 µA supply current and all communications pins ($\overline{\text{RST}}$, SCL, SDA) are high impedance. Connect to VDD for normal operation.
5	$\overline{\text{RST}}$	Reset: Connect to ground to disable I^2C communications.
6	NC	NC: No connection
7	SDA[1]	SDA: Serial data I/O line
8	SCL[1]	I^2C Serial Clock Input.

1. Use 4.7k pullup resistors for I^2C communication.

2 Mechanical and Electrical Specifications

2.1 Maximum Ratings

Voltage (with respect to GND unless otherwise noted)

V_{DD} ..... -0.3 V to +5.5 V

$\overline{SHDN}$, RST, SDA, SCL ..... -0.3 V to V_{DD}+0.3 V

Operating Temperature Range ..... -40°C to +105°C

Storage Temperature Range ..... -40°C to +125°C

Overpressure ..... 1000 kPa

2.2 Operating Characteristics

V_{DD} = 2.375 V to 5.5 V, T_A = -40°C to +105°C, unless otherwise noted. Typical values are at V_{DD} = 3.3 V, T_A = +25°C.

Ref	Parameters	Symbol	Conditions	Min	Typ	Max	Units
1	Operating Supply Voltage	V_{DD}		2.375	3.3	5.5	V
2	Supply Current	I_{DD}	Shutdown ($\overline{SHDN}$ = GND)	—	—	1	µA
			Standby	—	3.5	10	µA
			Average – at one measurement per second	—	5	6	µA
Pressure Sensor							
3	Range			50	—	115	kPa
4	Resolution			—	0.15	—	kPa
5	Accuracy		-20ºC to 85ºC	—	—	±1	kPa
6	Power Supply Rejection		Typical operating circuit at DC		0.1	—	kPa/V
			100 mV p-p 217 Hz square wave plus 100 mV pseudo random noise with 10 MHz bandwidth		0.1	—	kPa
7	Conversion Time *(Start Pressure and Temperature Conversion)*	tc	Time between start convert command and data available in the Pressure and Temperature registers	—	1.6	3	ms
8	Wakeup Time	tw	Time between leaving Shutdown mode ($\overline{SHDN}$ goes high) and communicating with the device to issue a command or read data.	—	3	5	ms
I^2C I/O Stages: SCL, SDA							
9	SCL Clock Frequency	f_{SCL}		—	—	400	kHz
10	Low Level Input Voltage	VIL		—	—	$0.3V_{DD}$	V
11	High Level Input Voltage	VIH		$0.7V_{DD}$	—	—	V
I^2C Outputs: SDA							
12	Data Setup Time	t_{SU}	Setup time from command receipt to ready to transmit	0	—	0.4	s
I^2C Addressing							
MPL115A2 uses 7-bit addressing, does not acknowledge the general call address 0000000. Slave address has been set to 0x60 or 1100000.							

3 Overview of Functions/Operation

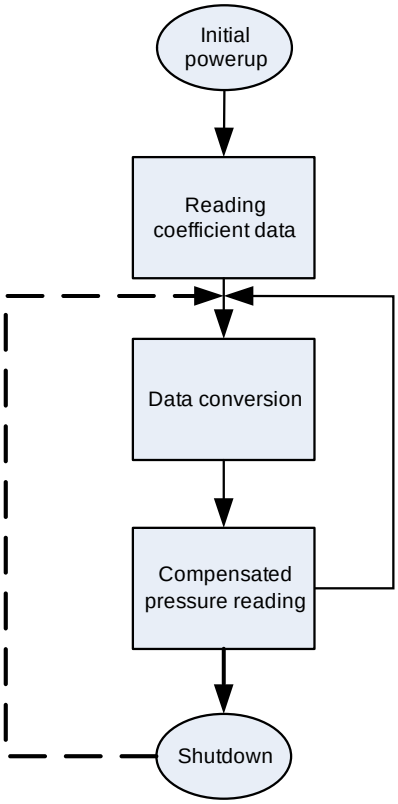

Figure 2. Sequence Flow Chart

The MPL115A interfaces to a host (or system) microcontroller in the user's application. All communications are via I^2C. A typical usage sequence is as follows:

Initial Power-up

All circuit elements are active. I^2C port pins are high impedance and associated registers are cleared. The device then enters standby mode.

Reading Coefficient Data

The user then typically accesses the part and reads the coefficient data. The main circuits within the slave device are disabled during read activity. The coefficients are usually stored in the host microcontoller local memory but can be re-read at any time.

It is not necessary to read the values stored in the host microcontroller multiple times because the coefficients within a device are constant and do not change. However, note that the coefficients will be different from device to device, and cannot be used for another part.

Data Conversion

This is the first step that is performed each time a new pressure reading is required which is initiated by the host sending the CONVERT command. The main system circuits are activated (wake) in response to the command and after the conversion completes, the result is placed into the Pressure and Temperature ADC output registers.

The conversion completes within the maximum conversion time, tc (see Row 7, in the Operating Characteristics Table). The device then enters standby mode.

Compensated Pressure Reading

After the conversion has been given sufficient time to complete, the host microcontroller reads the result from the ADC output registers and calculates the Compensated Pressure, a barometric/atmospheric pressure value which is compensated for changes in temperature and pressure sensor linearity. This is done using the coefficient data from the MPL115A and the raw sampled pressure and temperature ADC output values, in a compensation equation (detailed later). Note that this is an absolute pressure measurement with a vacuum as a reference.

From this step the host controller may either wait and then return to the Data Conversion step to obtain the next pressure reading or it may go to the Shutdown step.

Shutdown

For longer periods of inactivity the user may assert the $\overline{\text{SHDN}}$ input by driving this pin low to reduce system power consumption. This removes power from all internal circuits, including any registers. In the shutdown state, the Pressure and Temperature registers will be reset, losing any previous ADC output values.

This step is exited by taking the $\overline{\text{SHDN}}$ pin high. Wait for the maximum wakeup time, tw (see Row 8, in the Operating Characteristics Table), after which another pressure reading can be taken by transitioning to the data Conversion step.

Table 2. Device Memory Map

Address	Name	Description	Size (bits)
0x00	Padc_MSB	10-bit Pressure ADC output value MSB	8
0x01	Padc_LSB	10-bit Pressure ADC output value LSB	2
0x02	Tadc_MSB	10-bit Temperature ADC output value MSB	8
0x03	Tacd_LSB	10-bit Temperature ADC output value LSB	2
0x04	a0_MSB	a0 coefficient MSB	8
0x05	a0_LSB	a0 coefficient LSB	8
0x06	b1_MSB	b1 coefficient MSB	8
0x07	b1_LSB	b1 coefficient LSB	8
0x08	b2_MSB	b2 coefficient MSB	8
0x09	b2_LSB	b2 coefficient LSB	8
0x0A	c12_MSB	c12 coefficient MSB	8
0x0B	c12_LSB	c12 coefficient LSB	8
0x0C	Reserved*	—	—
0x0D	Reserved*	—	—
0x0E	Reserved*	—	—
0x0F	Reserved*	—	—
0x10	Reserved	—	—
0x11	Reserved	—	—
0x12	CONVERT	Start Pressure and Temperature Conversion	—

*These registers are set to 0x00. These are reserved, and were previously utilized as Coefficient values, c11 and c22, which were always 0x00.

For values with less than 16 bits, the lower LSBs are zero. For example, c12 is 14 bits and is stored into 2 bytes as follows:

$$\text{c12 MS byte} = \text{c12[13:6]} = [c12_{b13}, c12_{b12}, c12_{b11}, c12_{b10}, c12_{b9}, c12_{b8}, c12_{b7}, c12_{b6}]$$

$$\text{c12 LS byte} = \text{c12[5:0] \& “00”} = [c12_{b5}, c12_{b4}, c12_{b3}, c12_{b2}, c12_{b1}, c12_{b0}, 0, 0]$$

3.1 Pressure, Temperature and Coefficient Bit-Width Specifications

The table below specifies the initial coefficient bit-width specifications for the compensation algorithm and the specifications for Pressure and Temperature ADC values.

Pressure, Temperature and Compensation Coefficient Specifications						
	a0	b1	b2	c12	Padc	Tadc
Total Bits	16	16	16	14	10	10
Sign Bits	1	1	1	1	0	0
Integer Bits	12	2	1	0	10	10
Fractional Bits	3	13	14	13	0	0
dec pt zero pad	0	0	0	9	0	0

Example Binary Format Definitions:

a0 Signed, Integer Bits = 12, Fractional Bits = 3 :	Coeff a0 = S I_{11} I_{10} I_9 I_8 I_7 I_6 I_5 I_4 I_3 I_2 I_1 I_0 . F_2 F_1 F_0
b1 Signed, Integer Bits = 2, Fractional Bits = 13 :	Coeff b1 = S I_1 I_0 . F_{12} F_{11} F_{10} F_9 F_8 F_7 F_6 F_5 F_4 F_3 F_2 F_1 F_0
b2 Signed, Integer Bits = 1, Fractional Bits = 14 :	Coeff b2 = S I_0 . F_{13} F_{12} F_{11} F_{10} F_9 F_8 F_7 F_6 F_5 F_4 F_3 F_2 F_1 F_0
c12 Signed, Integer Bits = 0, Fractional Bits = 13, dec pt zero pad = 9 :	Coeff c12 = S 0 . 000 000 000 F_{12} F_{11} F_{10} F_9 F_8 F_7 F_6 F_5 F_4 F_3 F_2 F_1 F_0
Padc Unsigned, Integer Bits = 10 :	Padc U = I_9 I_8 I_7 I_6 I_5 I_4 I_3 I_2 I_1 I_0
Tadc Unsigned, Integer Bits =10 :	Tadc U = I_9 I_8 I_7 I_6 I_5 I_4 I_3 I_2 I_1 I_0

NOTE: Negative coefficients are coded in 2's complement notation.

3.2 Compensation

The 10-bit compensated pressure output, Pcomp, is calculated as follows:

$$\mathrm{Pcomp} = a0 + (b1 + c12 \cdot \mathrm{Tadc}) \cdot \mathrm{Padc} + b2 \cdot \mathrm{Tadc} \qquad \textbf{Eqn. 1}$$

Where:

Padc is the 10-bit pressure ADC output of the MPL115A

Tadc is the 10-bit temperature ADC output of the MPL115A

a0 is the pressure offset coefficient

b1 is the pressure sensitivity coefficient

b2 is the temperature coefficient of offset (TCO)

c12 is the temperature coefficient of sensitivity (TCS)

Pcomp will produce a value of 0 with an input pressure of 50 kPa and will produce a full-scale value of 1023 with an input pressure of 115 kPa.

$$\text{Pressure (kPa)} = \mathrm{Pcomp} \cdot \left[\frac{115 - 50}{1023}\right] + 50 \qquad \textbf{Eqn. 2}$$

3.3 Evaluation Sequence, Arithmetic Circuits

The following is an example of the calculation for Pcomp, the compensated pressure output. Input values are in **bold.**

c12x2 = **c12** * **Tadc**

a1 = **b1** + c12x2

a1x1 = a1 * **Padc**

y1 = **a0** + a1x1

a2x2 = **b2** * **Tadc**

Pcomp = y1 + a2x2

This can be calculated as a succession of Multiply Accumulates (MACs) operations of the form *y = a + b * x:*

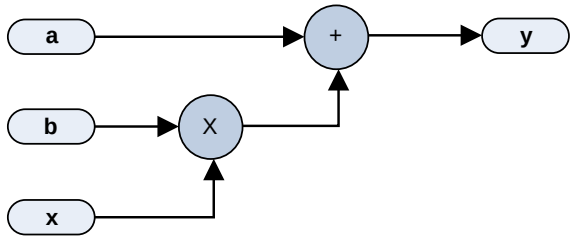

The polynomial can be evaluated (Equation 1) as a sequence of 3 MACs:

$$Pcomp = a0 + (b1 + c12 \cdot Tadc) \cdot Padc + b2 \cdot Tadc$$

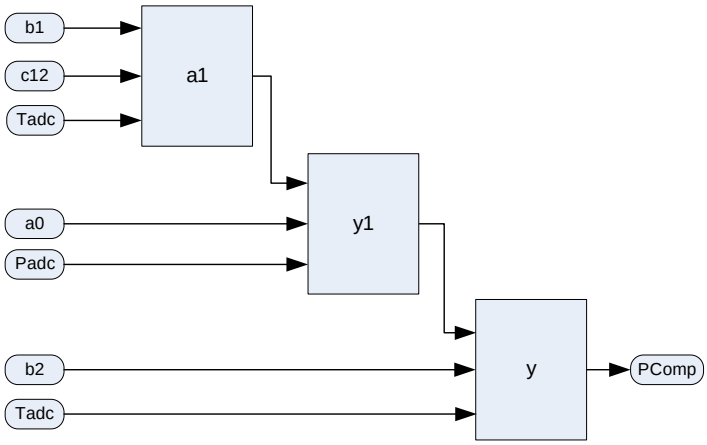

Please refer to Freescale application note AN3785 for more detailed notes on implementation.

3.4 I²C Device Read/Write Operations

All device read/write operations are memory mapped. Device actions e.g. “Start Conversions” are controlled by writing to the appropriate memory address location.

- For I²C the 7-bit Device Address (from Table 2) has a read/write toggle bit, where the least significant bit is ‘1’ for read operations or ‘0’ for write operations. The Device Address is 0xC0 for a *Write* and the Device Address is 0xC1 for a *Read*.
- The most significant bit in the Command tables below is not used and is don't care (X). In examples given it’s set to ‘0’.

Refer to Sensor I²C Setup and FAQ Application Note AN4481 for more information on I²C communication between the sensor and host controller.

Table 3. I²C Write Commands

Command	Binary	HEX(1)
Devices Address + Write bit	1100 0000	0xC0
Start Conversions	X001 0010	0x12

X = Don’t care

1 = The command byte needs to be paired with a 0x00 as part of the I²C exchange to complete the passing of Start Conversions.

The actions taken by the part in response to each command are as follows:

Table 4. I²C Write Command Description

Command	Action Taken
Start Conversions	Wake main circuits. Start clock. Allow supply stabilization time. Select pressure sensor input. Apply positive sensor excitation and perform A to D conversion. Select temperature input. Perform A to D conversion. Load the Pressure and Temperature registers with the result. Shut down main circuits and clock.

Table 5. I²C Read Command Description

Command	Binary	HEX(1)
Device Address + Read bit	1100 0001	0xC1
Read Pressure MSB	X000 0000	0x00
Read Pressure LSB	X000 0001	0x01
Read Temperature MSB	X000 0010	0x02
Read Temperature LSB	X000 0011	0x03
Read Coefficient data byte 1	X000 0100	0x04

X = don't care

These are MPL115A2 I²C commands to read coefficients, execute Pressure and Temperature conversions, and to read Pressure and Temperature data. The sequence of the commands for the interaction is given as an example to operate the MPL115A2.

Utilizing this gathered data, an example of the calculating the Compensated Pressure reading is given in floating point notation.

I²C Commands (simplified for communication)

Device Address + write bit "To Write" = 0xC0

Device Address + read bit "To Read" = 0xC1

Command to Write "Convert Pressure and Temperature" = 0x12

Command to Read "Pressure ADC High byte" = 0x00

Command to Read "Pressure ADC Low byte" = 0x01

Command to Read "Temperature ADC High byte" = 0x02

Command to Read "Temperature ADC Low byte" = 0x03

Command to Read "Coefficient data byte 1 High byte" = 0x04

Read Coefficients:

[0xC0], [0x04], [0xC1], [0x3E], [0xCE], [0xB3], [0xF9], [0xC5], [0x17], [0x33], [0xC8]

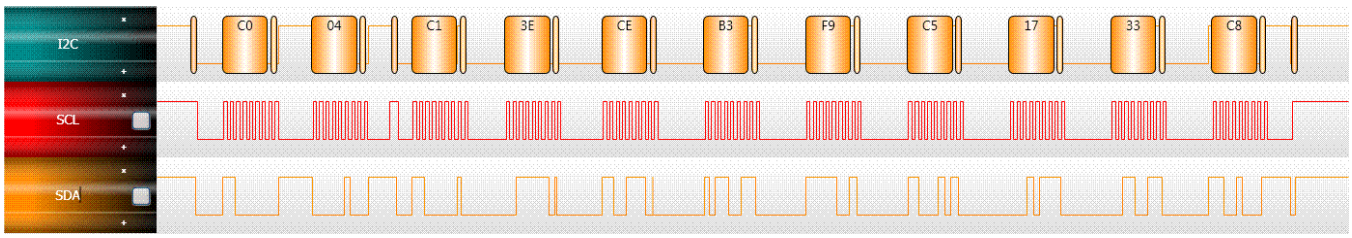

Figure 3. I²C Read Coefficient Datagram

a0 coefficient MSB	=	0x3E						
a0 coefficient LSB	=	0xCE	a0 coefficient	=	0x3ECE	=	2009.75	
b1 coefficient MSB	=	0xB3						
b1 coefficient LSB	=	0xF9	b1 coefficient	=	0xB3F9	=	-2.37585	
b2 coefficient MSB	=	0xC5						
b2 coefficient LSB	=	0x17	b2 coefficient	=	0xC517	=	-0.92047	
c12 coefficient MSB	=	0x33						
c12 coefficient LSB	=	0xC8	c12 coefficient	=	0x33C8	=	0.000790	

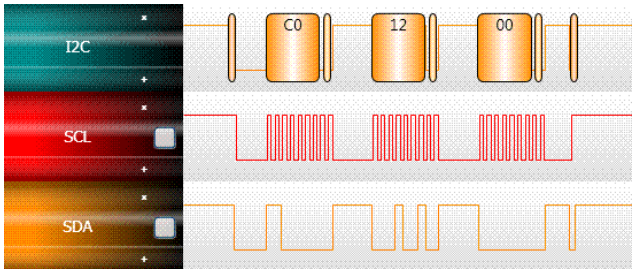

Figure 4. I^{2}C Start Conversion Datagram

Command to I^{2}C Start Conversion, 0x12

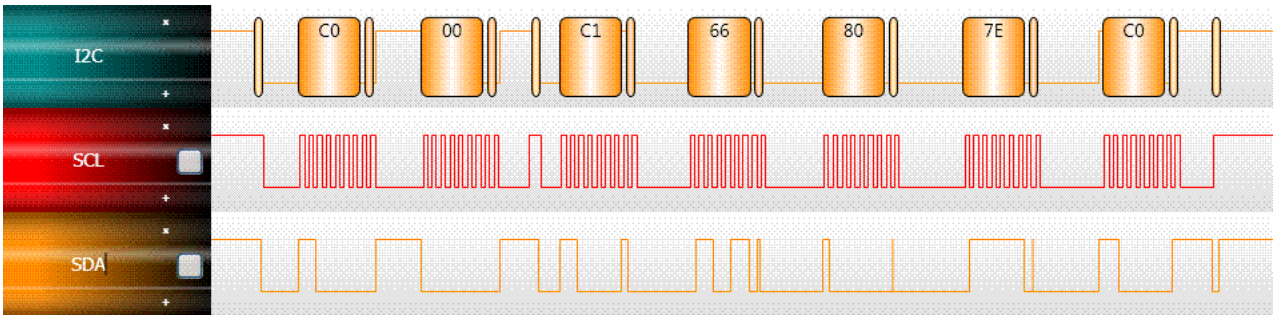

Figure 5. I^{2}C Read Results Datagram

Pressure MSB	=	0x66						
Pressure LSB	=	0x80	Pressure	=	0x6680	=	0110 0110 1100 0000	
						=	410 ADC counts	
Temperature MSB	=	0x7E						
Temperature LSB	=	0xC0	Temperature	=	0x7EC0	=	0111 1110 1100 0000	
						=	507 ADC counts	

3.5 Example of Pressure Compensated Calculation in Floating-point Notation

a0 coefficient	=	2009.75
b1 coefficient	=	-2.37585
b2 coefficient	=	-0.92047
c12 coefficient	=	0.000790

Pressure	=	410 ADC counts
Temperature	=	507 ADC counts

Pressure Compensation:

$$Pcomp = a0 + (b1 + c12 \cdot Tadc) \cdot Padc + b(c)$$

Using the evaluation sequence shown in Section 3.3:

c12x2	=	c12 * Tadc	=	0.000790 * 507	=	0.40053
a1	=	b1 + c12x2	=	-2.37585 + 0.40053	=	-1.97532
a1x1	=	a1 * Padc	=	-1.97532 * 410	=	-809.8812
y1	=	a0 + a1x1	=	2009.75 + (-809.8812)	=	1199.8688
a2x2	=	b2 * Tadc	=	-0.92047 * 507	=	-466.67829
PComp	=	y1 + a2x2	=	1199.8688 + (-466.67829)	=	733.19051

$$\text{Pressure (kPa)} = Pcomp \cdot \left[\frac{115 - 50}{1023}\right] + 50$$

$$= 96.59 kPa$$

$$= 733.19 \cdot \left[\frac{115 - 50}{1023}\right] + 50$$

4 Solder Recommendations

1. Use SAC solder alloy (i.e., Sn-Ag-Cu) with a melting point of about 217°C. It is recommended to use SAC305 (i.e., Sn-3.0 wt.% Ag-0.5 wt.% Cu).
2. Reflow
   - Ramp up rate: 2 to 3°C/s.
   - Preheat flat (soak): 110 to 130s.
   - Reflow peak temperature: 250°C to 260°C (depends on exact SAC alloy composition).
   - Time above 217°C: 40 to 90s (depends on board type, thermal mass of the board/quantities in the reflow).
   - Ramp down: 5 to 6°C/s.
   - Using an inert reflow environment (with O_2 level about 5 to 15 ppm).

NOTE: The stress level and signal offset of the device also depends on the board type, board core material, board thickness and metal finishing of the board.

Please refer to Freescale application note AN3150, Soldering Recommendations for Pressure Sensor Devices for any additional information.

5 Handling Recommendations

It is recommended to handle the MPL115A pressure sensor with a vacuum pick and place tool. Sharp objects utilized to move the MPL115A pressure sensor increase the possibility of damage via a foreign object/tool into the small exposed port.

The sensor die is sensitive to light exposure. Direct light exposure through the port hole can lead to varied accuracy of pressure measurement. Avoid such exposure to the port during normal operation.

Please note that the Pin 1 designator is on the bottom of the package. Do not use the port as a orientation reference in production.

6 Soldering/Landing Pad Information

The LGA package is compliant with the RoHS standard. It is recommended to use a no-clean solder paste to reduce cleaning exposure to high pressure and chemical agents that can damage or reduce life span of the Pressure sensing element.

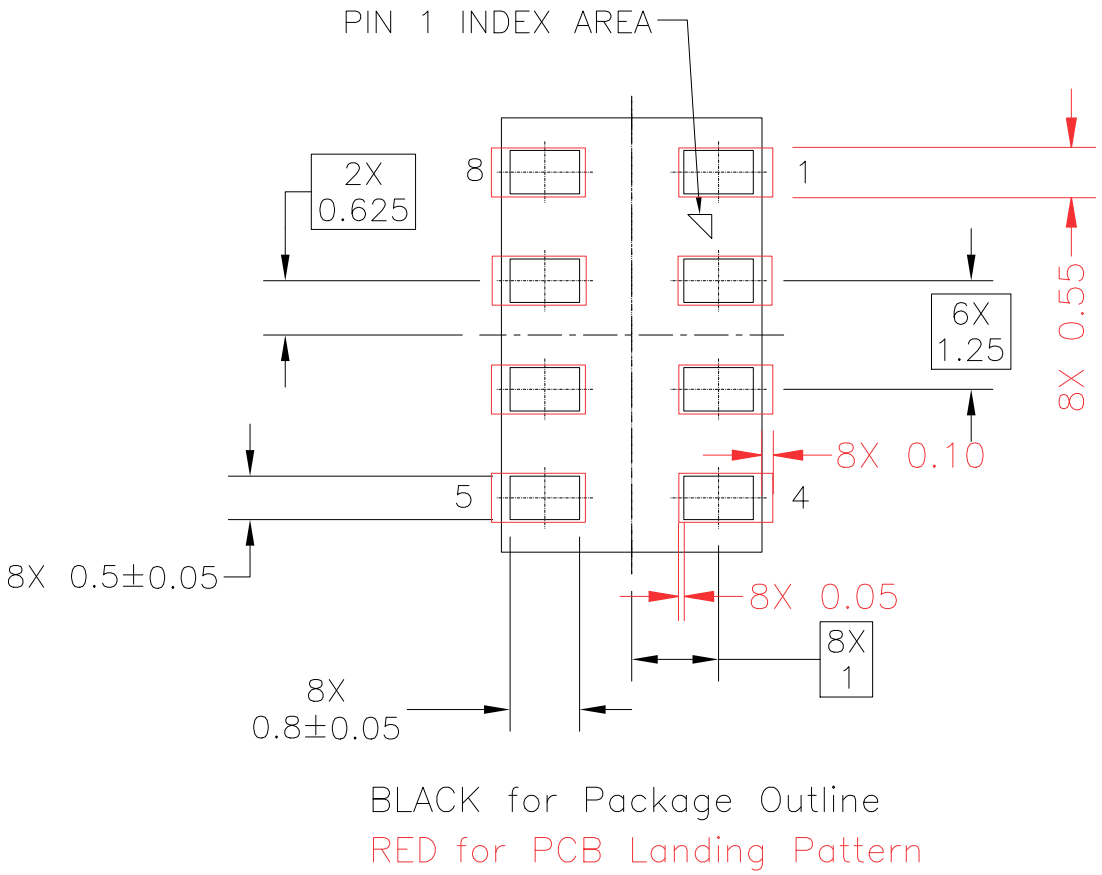

Figure 6. MPL115A2 Recommended PCB Landing Pattern

7 Tape and Reel Specifications

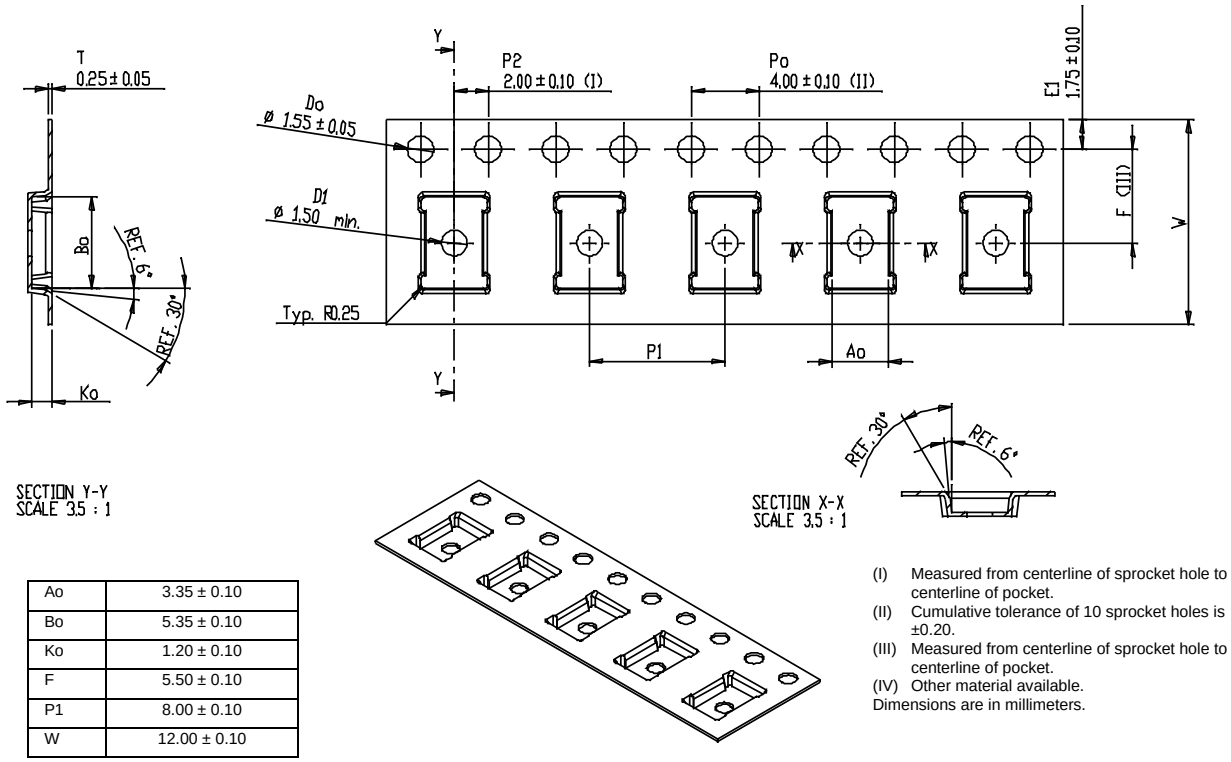

Ao	3.35 ± 0.10
Bo	5.35 ± 0.10
Ko	1.20 ± 0.10
F	5.50 ± 0.10
P1	8.00 ± 0.10
W	12.00 ± 0.10

(I) Measured from centerline of sprocket hole to centerline of pocket.
(II) Cumulative tolerance of 10 sprocket holes is ±0.20.
(III) Measured from centerline of sprocket hole to centerline of pocket.
(IV) Other material available.
Dimensions are in millimeters.

Figure 7. LGA (3 x 5) Embossed Carrier Tape Dimensions

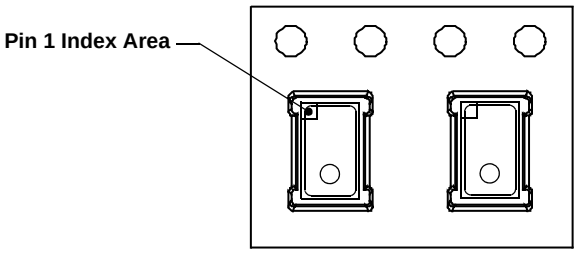

Figure 8. Device Orientation in Chip Carrier

PACKAGE DIMENSIONS

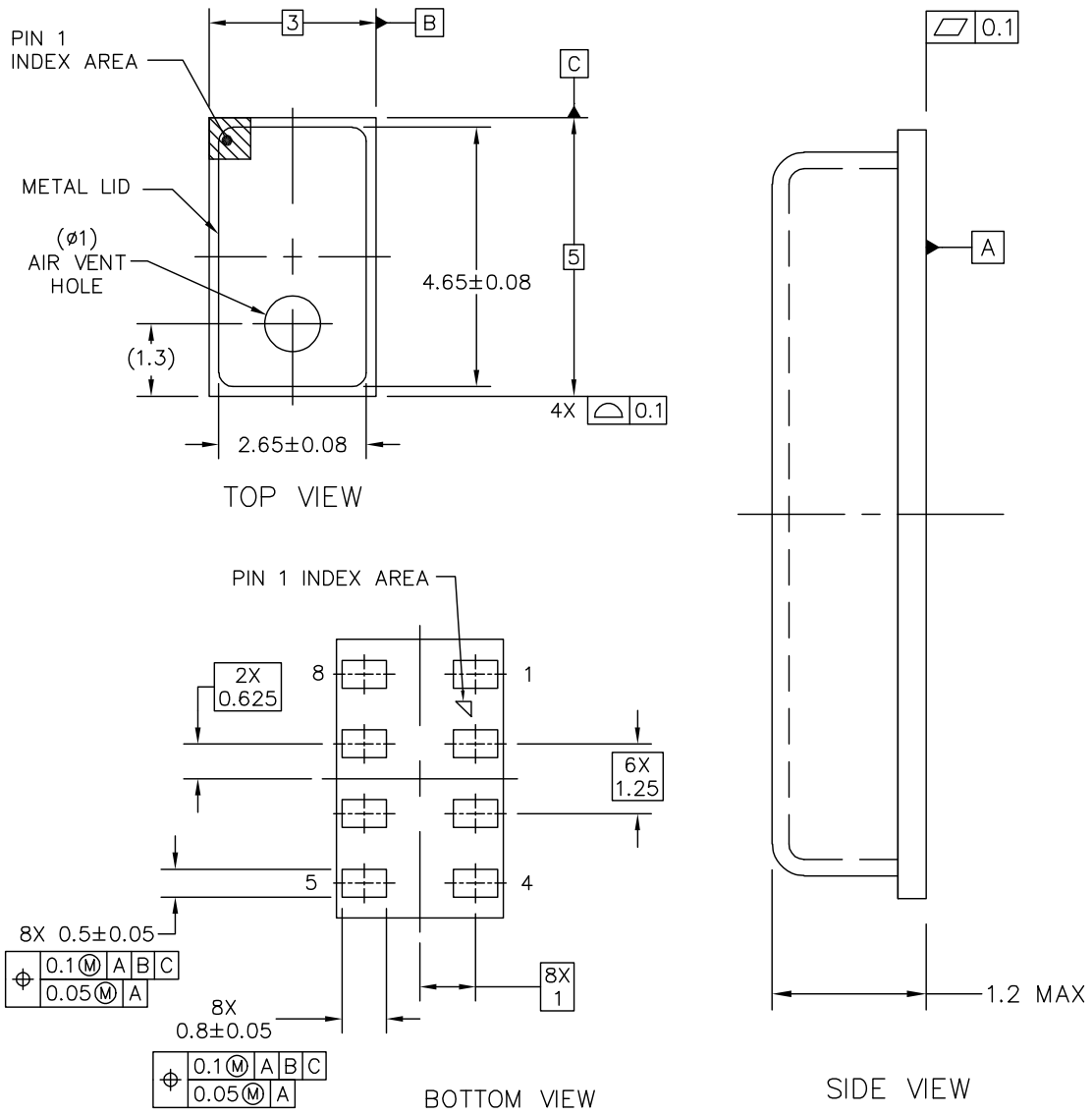

NOTES:

1. ALL DIMENSIONS IN MILLIMETERS.
2. DIMENSIONING AND TOLERANCING PER ASME Y14.5M-1994

© FREESCALE SEMICONDUCTOR, INC. ALL RIGHTS RESERVED.	**MECHANICAL OUTLINE**	PRINT VERSION NOT TO SCALE
TITLE: LGA 8 I/O, 3 X 5 X 1.25 PITCH, SENSOR 1.2MAX MM PKG	DOCUMENT NO: 98ASA10829D	REV: A
	CASE NUMBER: 2015-02	10 MAR 2010
	STANDARD: NON-JEDEC	

CASE 2015-02
ISSUE A
LGA PACKAGE

Table 6. Revision History

Revision number	Revision date	Description of changes
8	06/2012	• Updated graphic on page 1, Section 2.2 Operating Characteristics: Ref 7: Conversion Time: changed Typ from 3.0 to 1.6, Section 3.0 Overview of Functions/Operation: Reading Coefficient Data deleted statement that reading of coefficients may be executed only once, Table 2: added Size (bits) column in table, added new Section 3.4 I^2C Device Read/Write Operations
9	10/2012	• Changed Example Binary format definitions b1 signed From: 7 To: 13, added F_{11} to Coeff b1, b2 and c12 on page 6. • Removed MPL115A2T2 from ordering table.

How to Reach Us:

Home Page:
freescale.com

Web Support:
freescale.com/support

Information in this document is provided solely to enable system and software implementers to use Freescale products. There are no express or implied copyright licenses granted hereunder to design or fabricate any integrated circuits based on the information in this document.

Freescale reserves the right to make changes without further notice to any products herein. Freescale makes no warranty, representation, or guarantee regarding the suitability of its products for any particular purpose, nor does Freescale assume any liability arising out of the application or use of any product or circuit, and specifically disclaims any and all liability, including without limitation consequential or incidental damages. “Typical” parameters that may be provided in Freescale data sheets and/or specifications can and do vary in different applications, and actual performance may vary over time. All operating parameters, including “typicals,” must be validated for each customer application by customer’s technical experts. Freescale does not convey any license under its patent rights nor the rights of others. Freescale sells products pursuant to standard terms and conditions of sale, which can be found at the following address: freescale.com/SalesTermsandConditions.

Freescale, the Freescale logo, AltiVec, C-5, CodeTest, CodeWarrior, ColdFire, C-Ware, Energy Efficient Solutions logo, Kinetis, mobileGT, PowerQUICC, Processor Expert, QorIQ, Qorivva, StarCore, Symphony, and VortiQa are trademarks of Freescale Semiconductor, Inc., Reg. U.S. Pat. & Tm. Off. Airfast, BeeKit, BeeStack, ColdFire+, CoreNet, Flexis, MagniV, MXC, Platform in a Package, QorIQ Qonverge, QUICC Engine, Ready Play, SafeAssure, SMARTMOS, TurboLink, Vybrid, and Xtrinsic are trademarks of Freescale Semiconductor, Inc. All other product or service names are the property of their respective owners.
© 2013 Freescale Semiconductor, Inc.

Document Number: MPL115A2
Rev. 9
02/2013