USER AND SERVICE MANUAL

PETH-20

Low Noise Power Supply for Laboratory Use ±15V, 500mA

Design: ***ETH*** Quantumoptics, frank@phys.ethz.ch

Manufactured by ELL

Printed in _____ (write your location here) 25.08.2017

SAFETY WARNINGS

This device is cooled by convection. If you install it in a cabinet, make sure that the air circulation is sufficient.

This device is operated with 230 V. Make sure alle three lines are properly connected.

Replace fuse only with exact the same type. If fuse is black contact manufacturer.

If it seems that normal operation is not occurring, you must disconnect this device from the mains. Contact manufacturer for inspection.

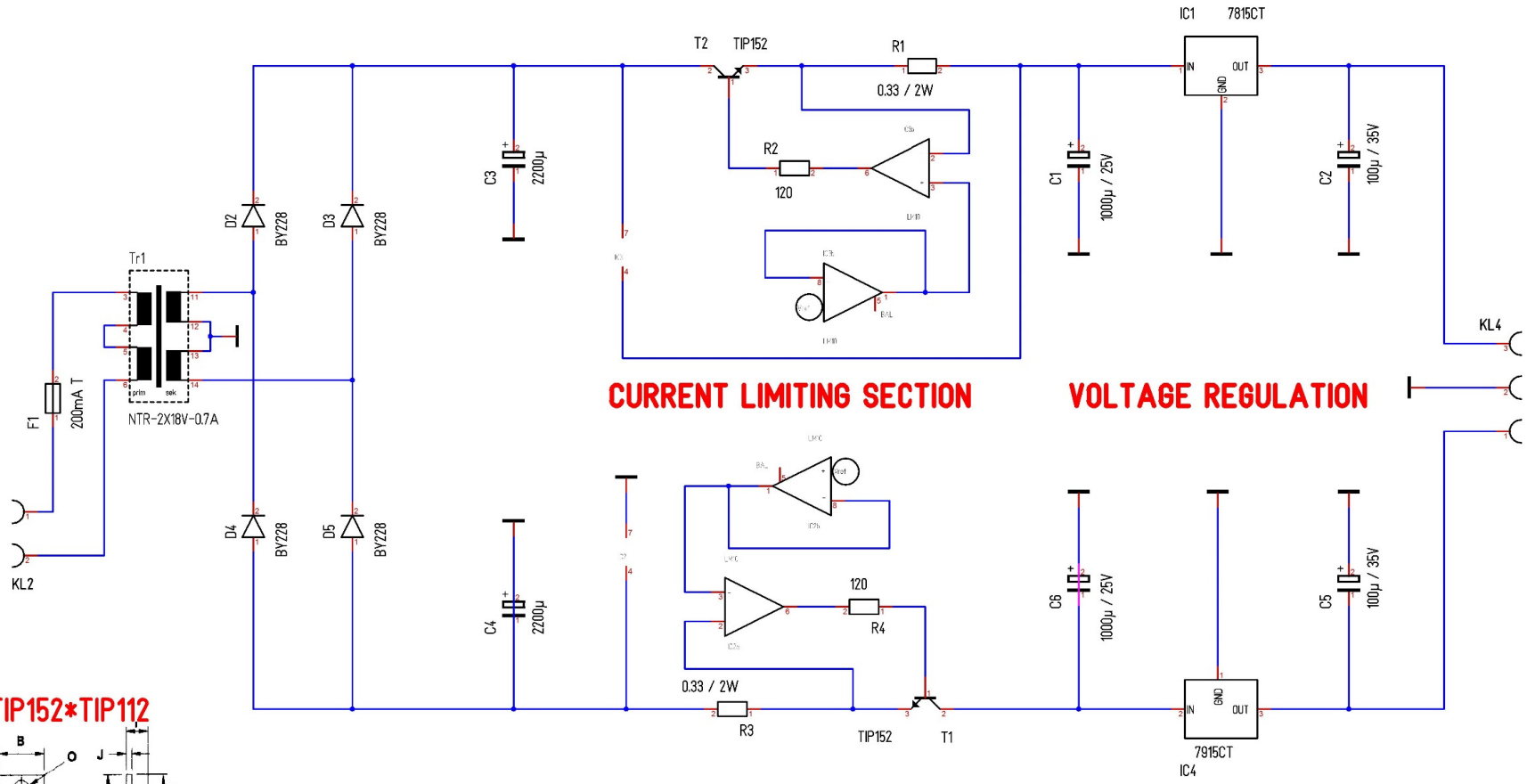

TIP152*TIP112

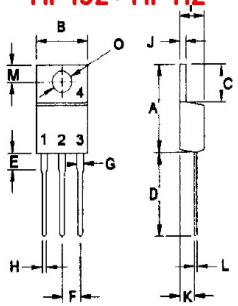

PIN 1.BASE
2.COLLECTOR
3.EMITTER
4.COLLECTOR(CASE)

7815

TO-220 Power Package (T)

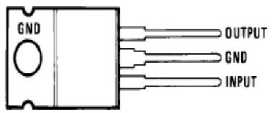

7915

TO-220 Plastic Package (T)

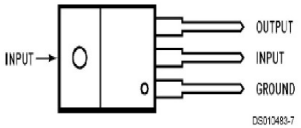

Massstab	136.00%	Alexander C. Frank	Blatt :<unbenannt>
Änderung	25.08.17	14:46	ETH QUANTUMOPTICS
Ausgabe	25.08.17	14:47	
Datei	PETH-20.T3001		

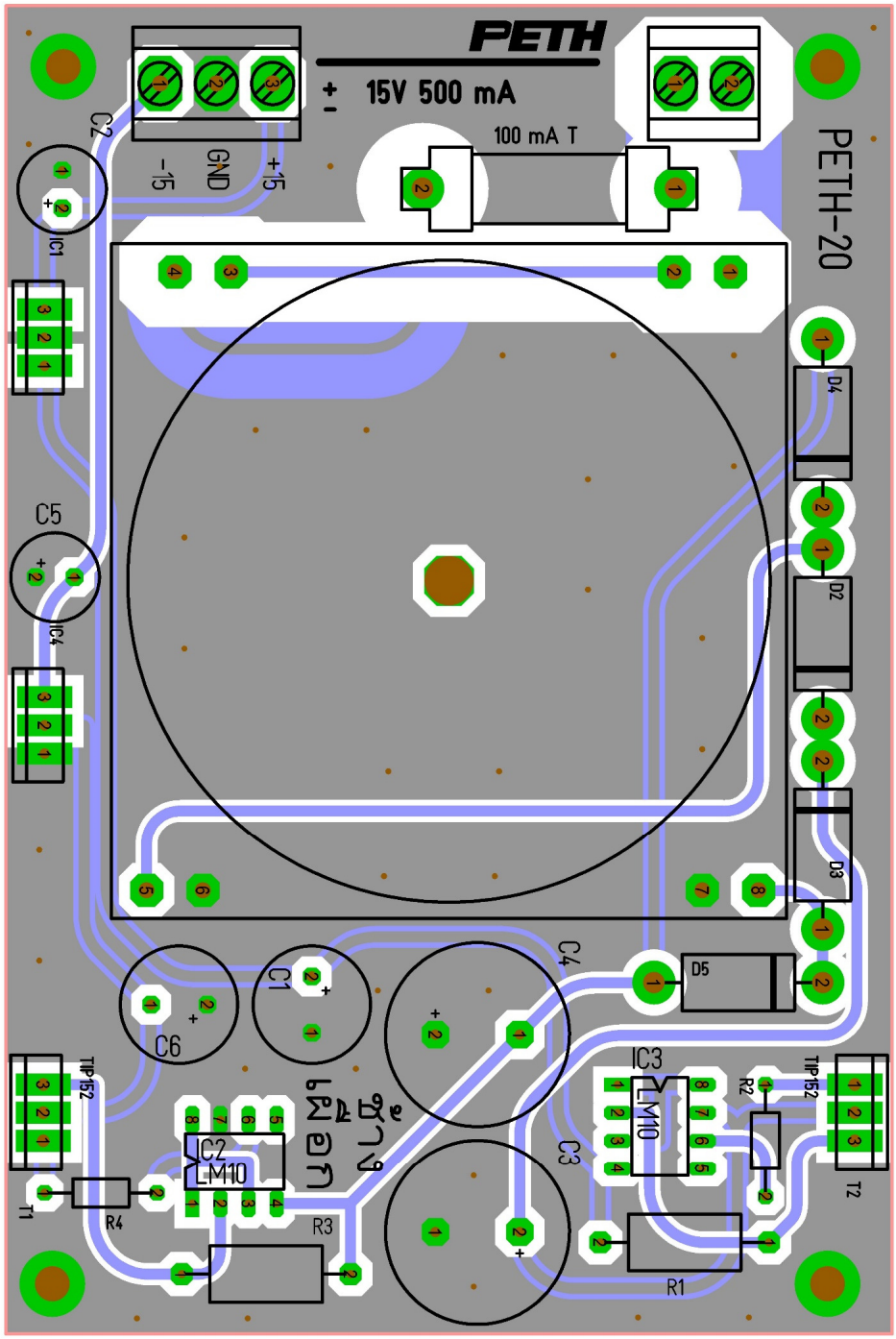
PETH
15V 500 mA
100 mA T
PETH-20
GND
-15
+15
C2
IC1
C5
IC4
D4
D2
D3
D5
C4
C1
C6
IC3
LM10
R2
TIP152
T2
C3
R1
IC2
LM10
R3
R4
T1
TIP152

BOM

Pos	Name	Wert	Gehäuse	Lieferant	Best.-Nr.:
1	C1	1000µ / 25V	ELKO5-10.5	distrelec	800633
2	C2	100µ / 35V	ELKO3.5-8	distrelec	800629
3	C3	2200µ	ELKO7.5-16.5	distrelec	800642
4	C4	2200µ	ELKO7.5-16.5	distrelec	800642
5	C5	100µ / 35V	ELKO3.5-8	distrelec	800629
6	C6	1000µ / 25V	ELKO5-10.5	distrelec	800633
7	D2	BY228	D6	distrelec	60 02 10
8	D3	BY228	D6	distrelec	60 02 10
9	D4	BY228	D6	distrelec	60 02 10
10	D5	BY228	D6	distrelec	60 02 10
11	F1	200mA T	SICHERG. 5x20	Lager B10	30073.8
12	IC1	7815CT	TO-220ST	distrelec	644609
13	IC2	LM10	DIL8	distrelec	640706
14	IC3	LM10	DIL8	distrelec	640706
15	IC4	7915CT	TO-220ST	distrelec	644641
16	KL2	KLEMME 2POL	KLEMME 2	Reichelt	AKL 101-02
17	KL4	KLEMME 3POL	KLEMME 3	Reichelt	AKL 101-03
18	R1	0.33 / 2W	R6	distrelec	711194
19	R2	120	R4	Lager B10	30380.2
20	R3	0.33 / 2W	R6	distrelec	711194
21	R4	120	R4	Lager B10	30380.2
22	T1	TIP152	TO220	distrelec	611301
23	T2	TIP152	TO220	distrelec	611301
24	Tr1	NTR-2X15V-0.8A	T-RING25VA	Reichelt	RKPT 25215
25	S	Sockel DIL-8	DIL8	Lager B10	30059.2
26	S	Sockel DIL-8	DIL8	Lager B10	30059.2
27	S	Haube Sicherung		distrelec	27 11 38
28	S	Sockel Sicherung		distrelec	27 11 34
29	PCB	Platine		QO	PETH-20
30	U	U-Profil Montagewinkel		QO	
31	S	5 Stck Schraube M3x20 Senkk.		B10	
32	S	4 Stck Schraube M3 x 16 Senkk.		B10	
33	D	4 Stck Distanzrolle Alu D=3 x L=3		B10	
34	M	4 Stck Mutter M3		B10	
35	U	1 Stck Teflon 0.5 x 80 x 120		QO	
36	M	4 Stck Mutter M3 mit Kronenscheibe		B10	
37	S	3 Stck Isolierscheibe Glimmer		B10	30050.1
38	S	3 Stck Isolierscheibe für Schraube M3		B10	???
39					

NOTES

This device is designed to teach electronics by example. There are other ways (smaller BOM :-) to construct a linear Power Supply.